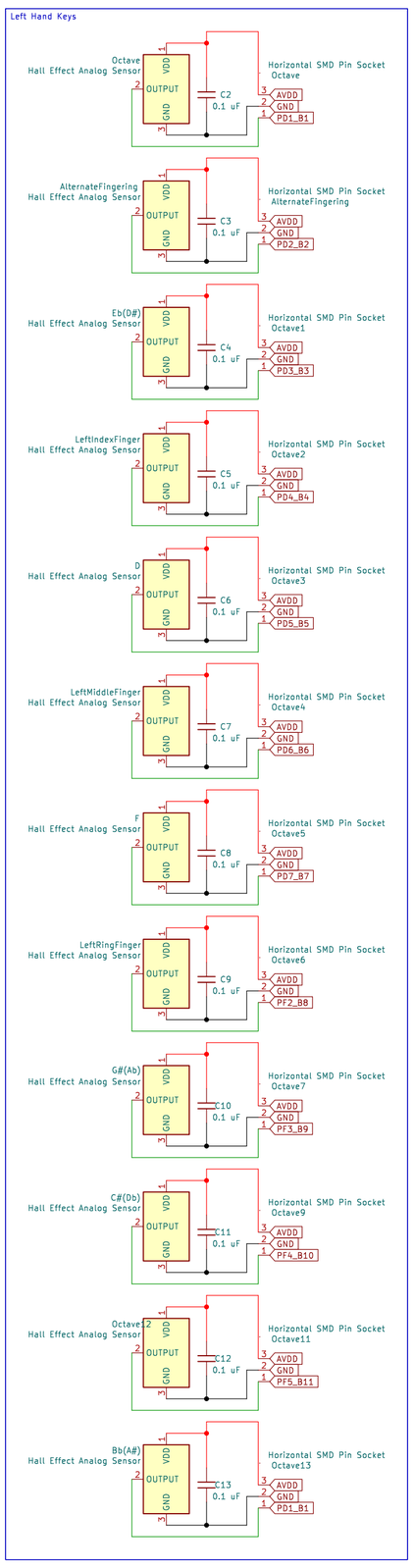

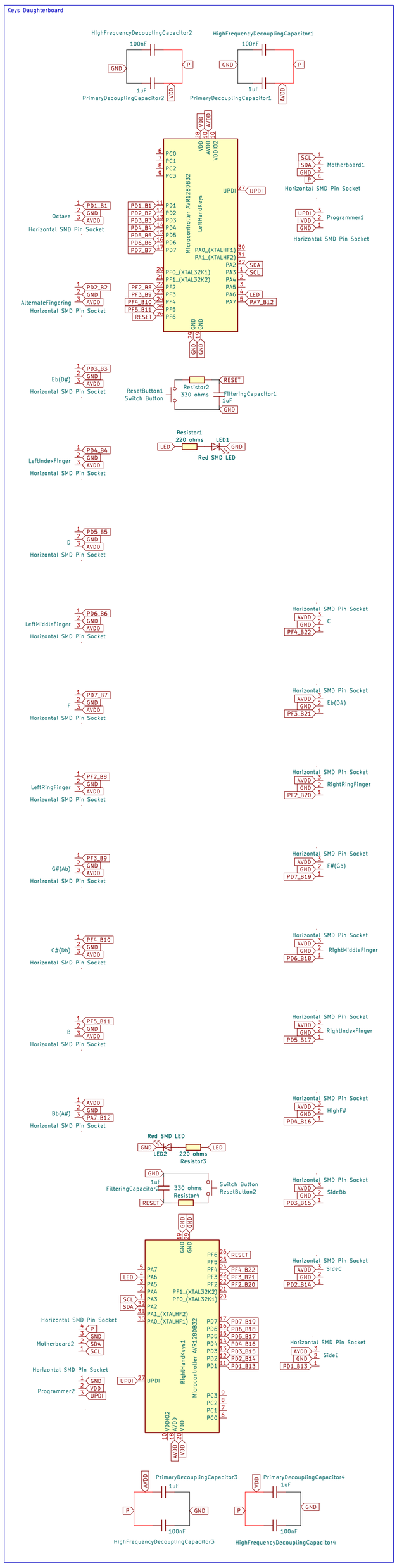

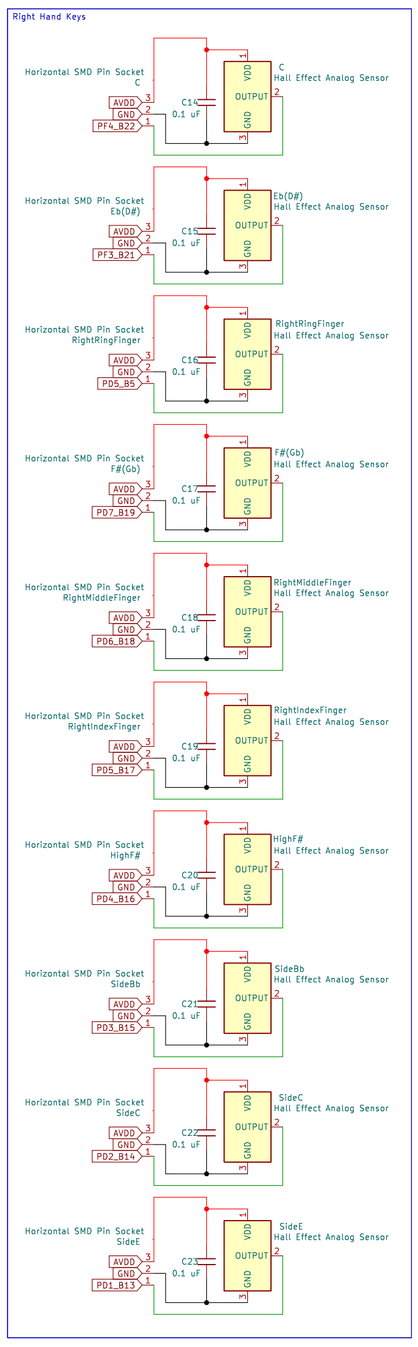

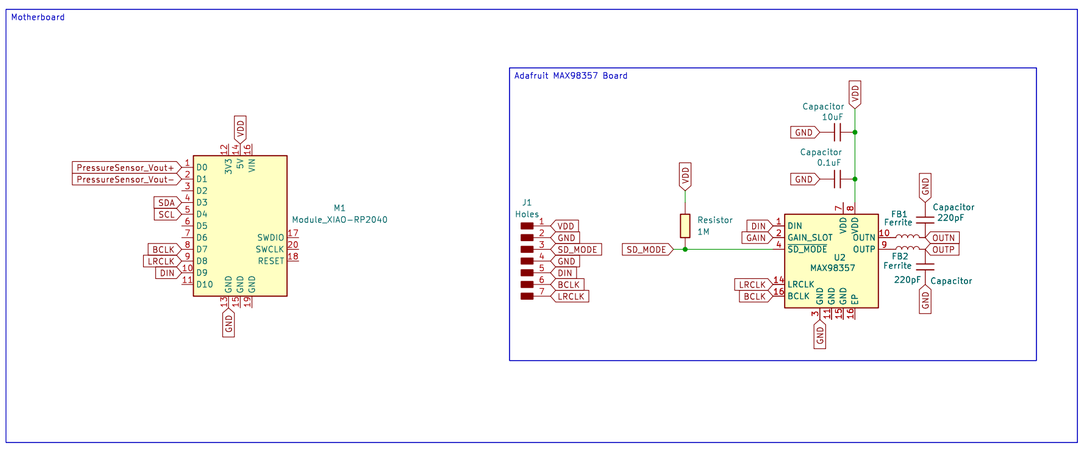

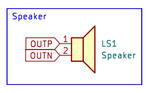

Sheet: /
File: FinalProject.kicad_sch

Title:

Size: D	Date:	Rev:
KiCad E.D.A. 9.0.0		Id: 1/1