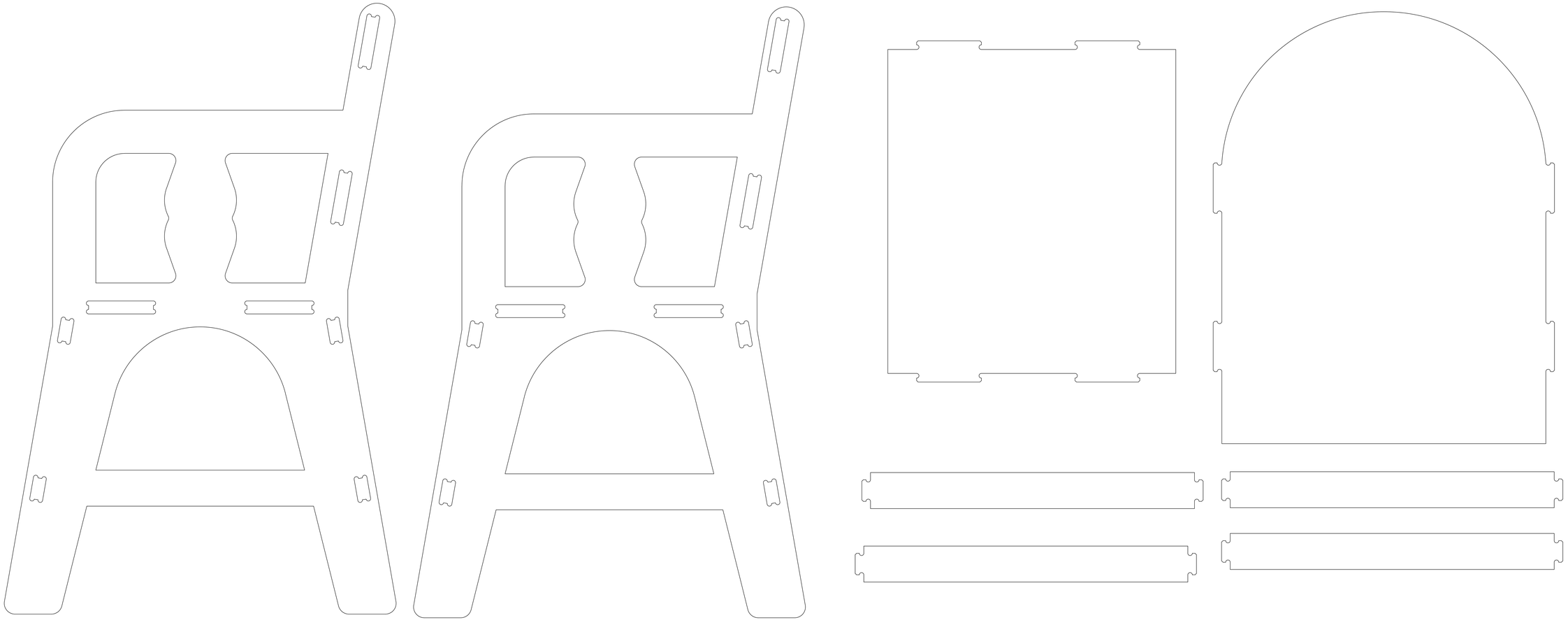

DRAWN		
LAJAD	18/08/2020	
CHECKED		TITLE
QA		
MFG		
APPROVED		
		SIZE / DWG NO / REV
		Personalizado (mm) / Chair_Cutting /
		SCALE 1:1 / SHEET 1 OF 1