This is to show you all the steps which I went through with Modera Player 4.

Select Machine and check environment setting.

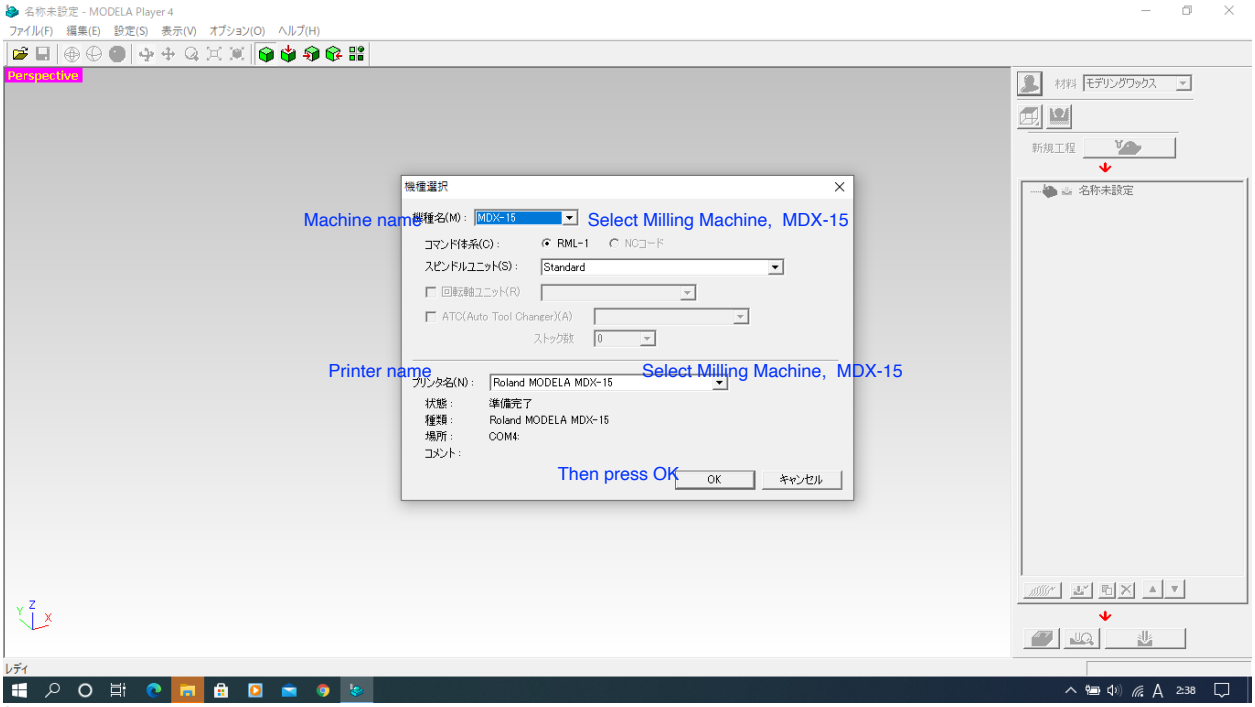

Select milling machine

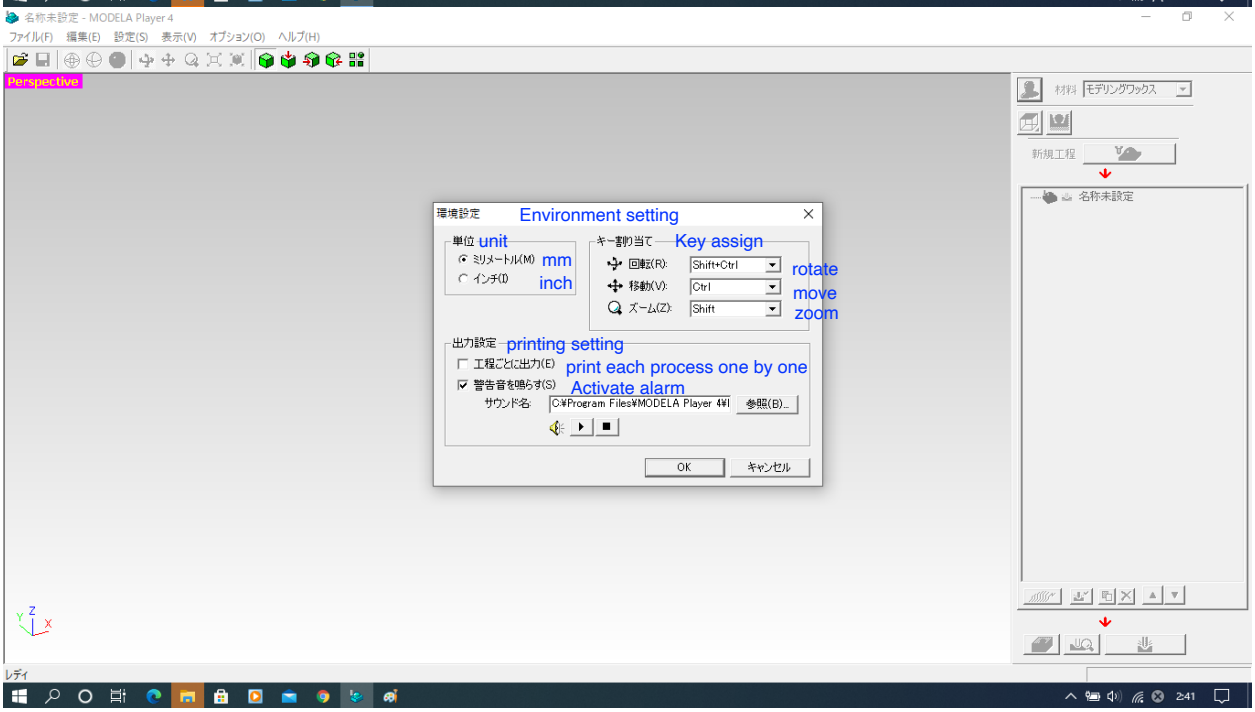

Confirm setting

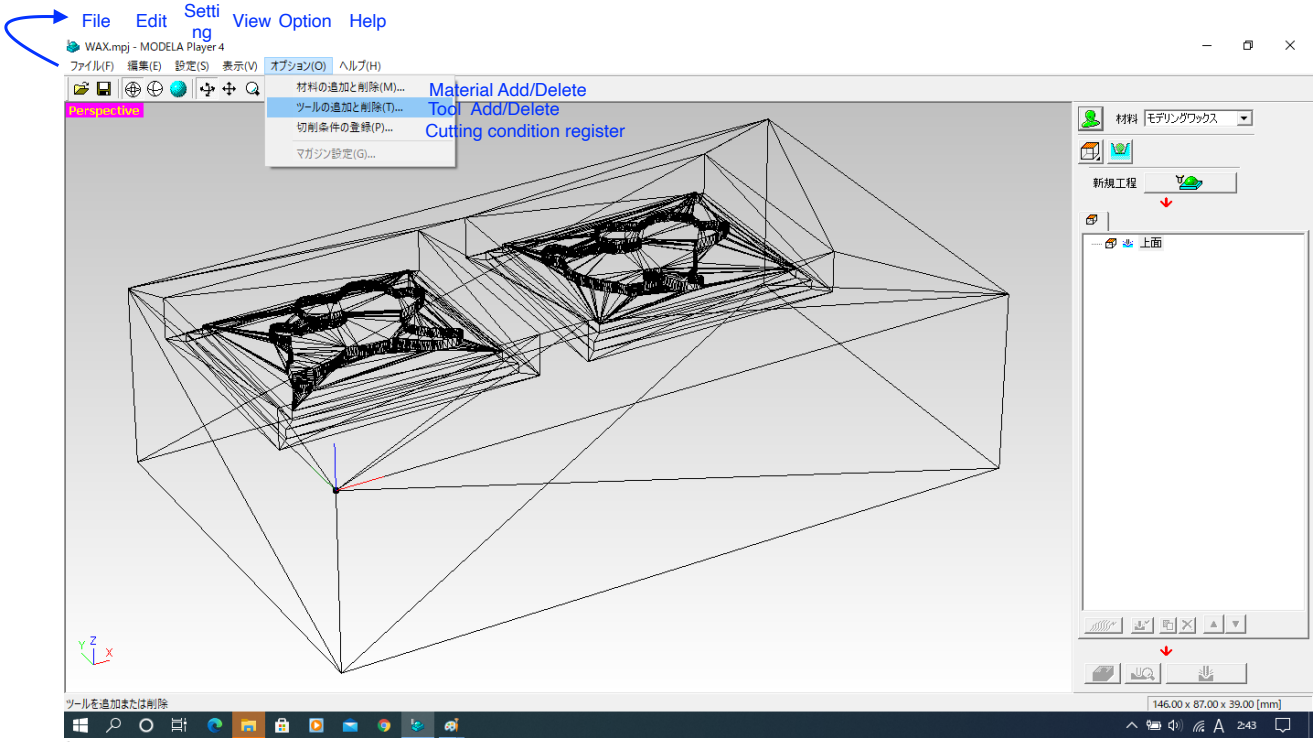

Select Option -> Tool add/del to open Tool menue

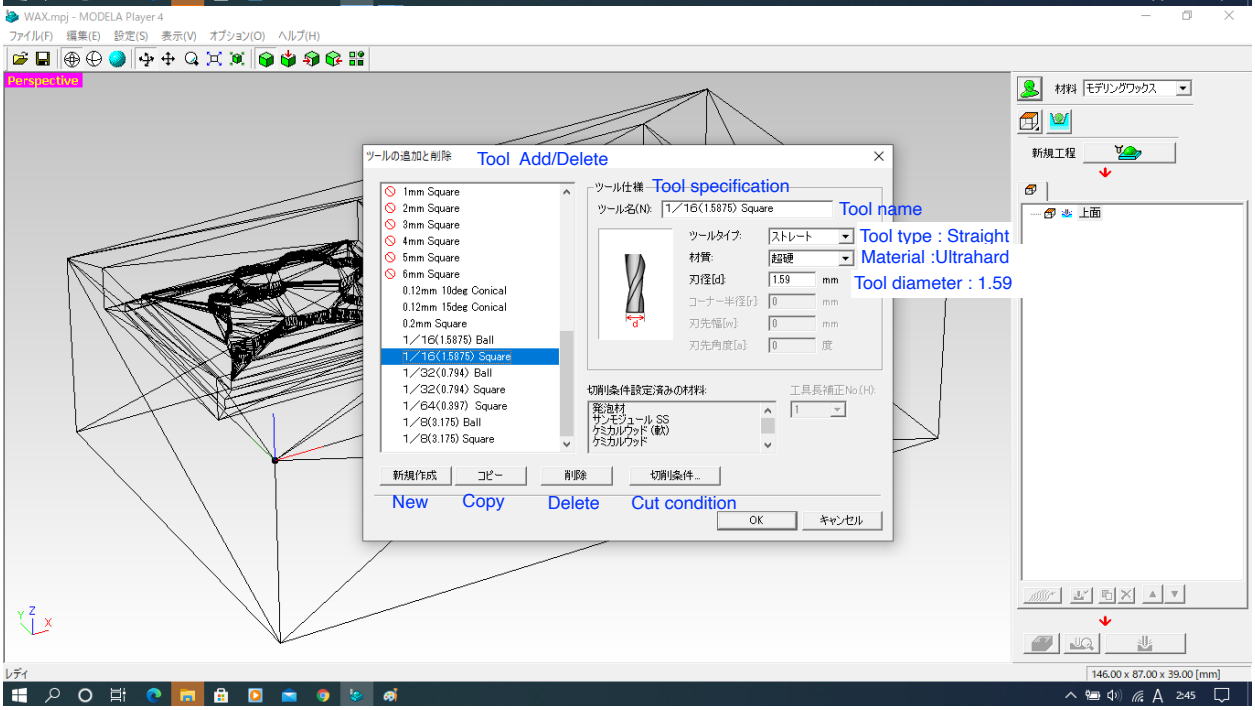

Confirm if necessary tools are registered or not. If not, create as new.

1/16 square end mill is there

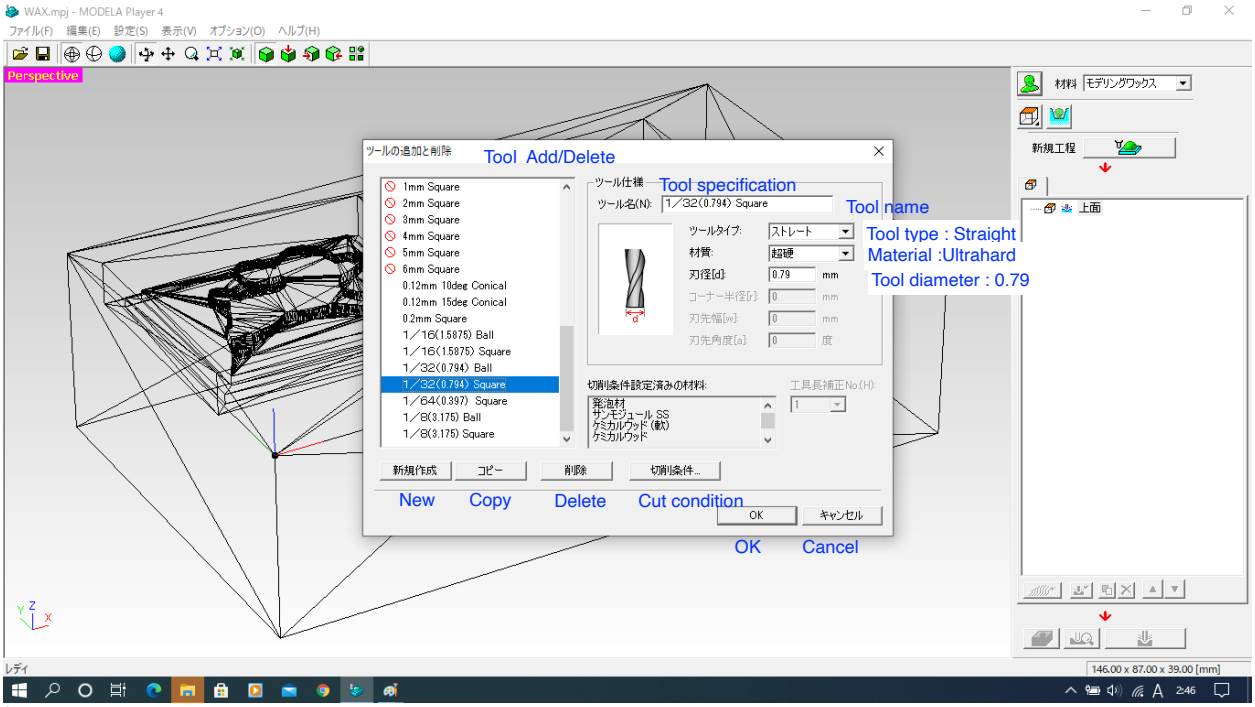

1/32 square end mill is there as well

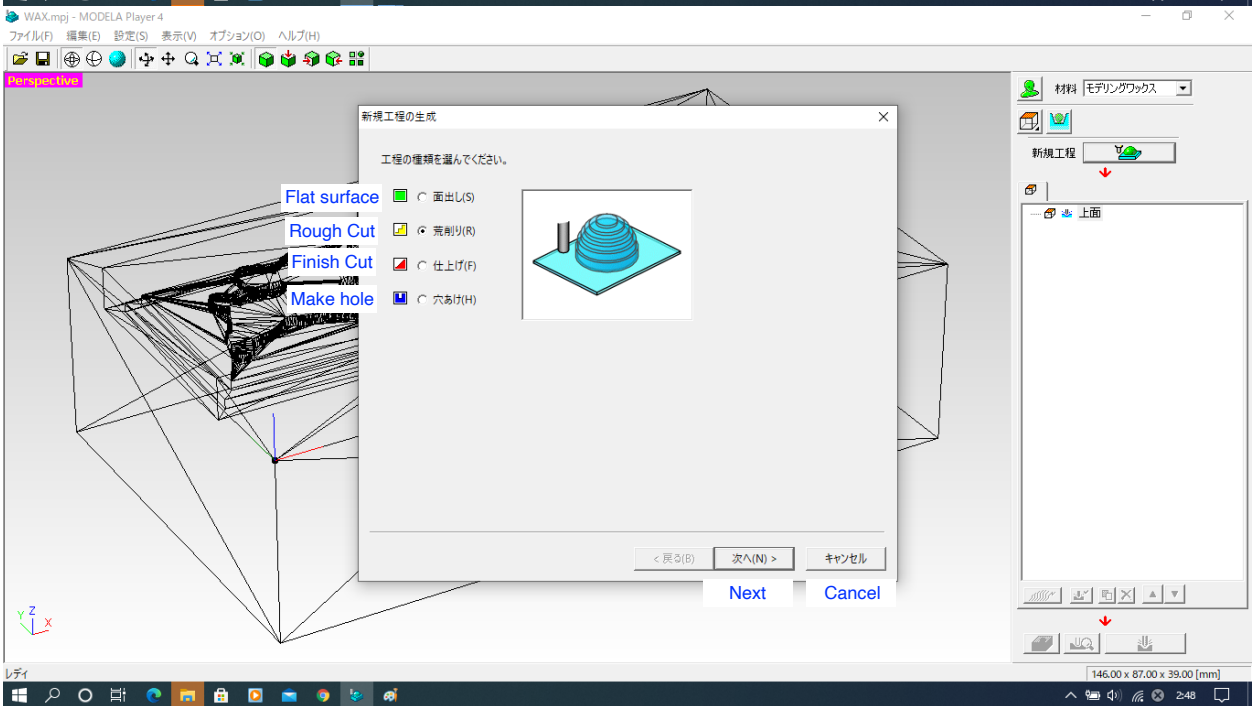

Select rough cut, then Next

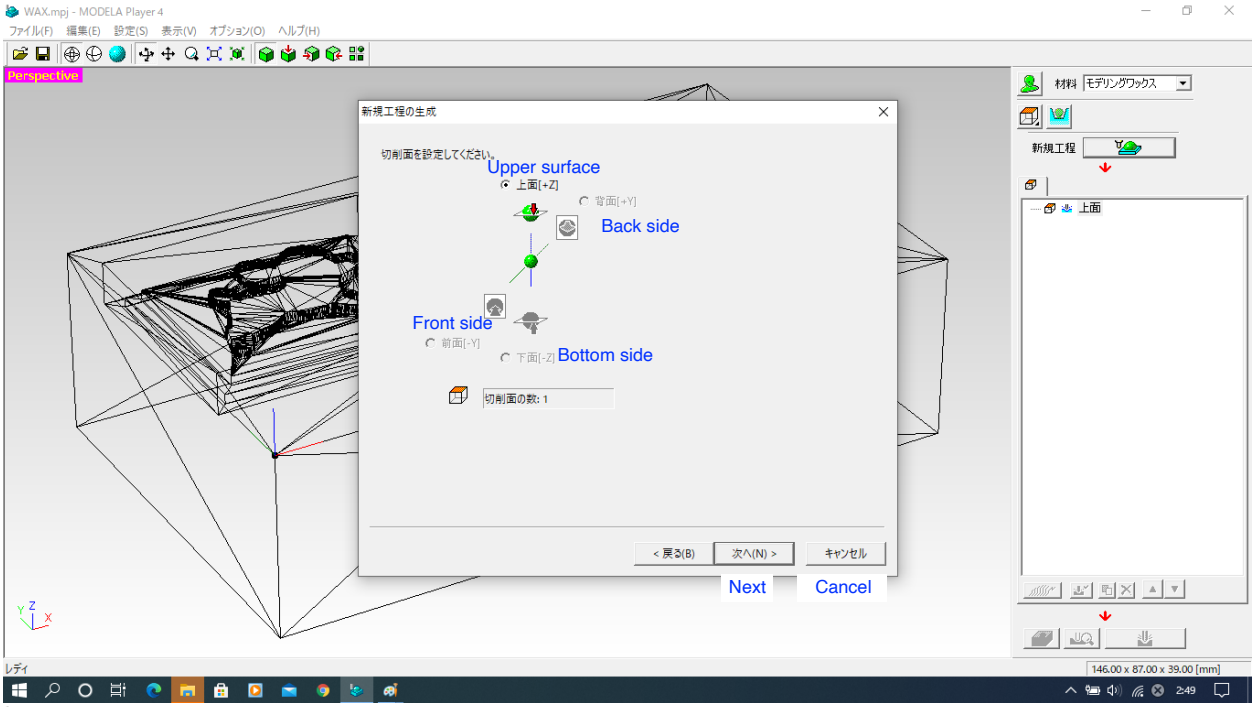

Confirm cutting dimension
as Upper surface
Then Next

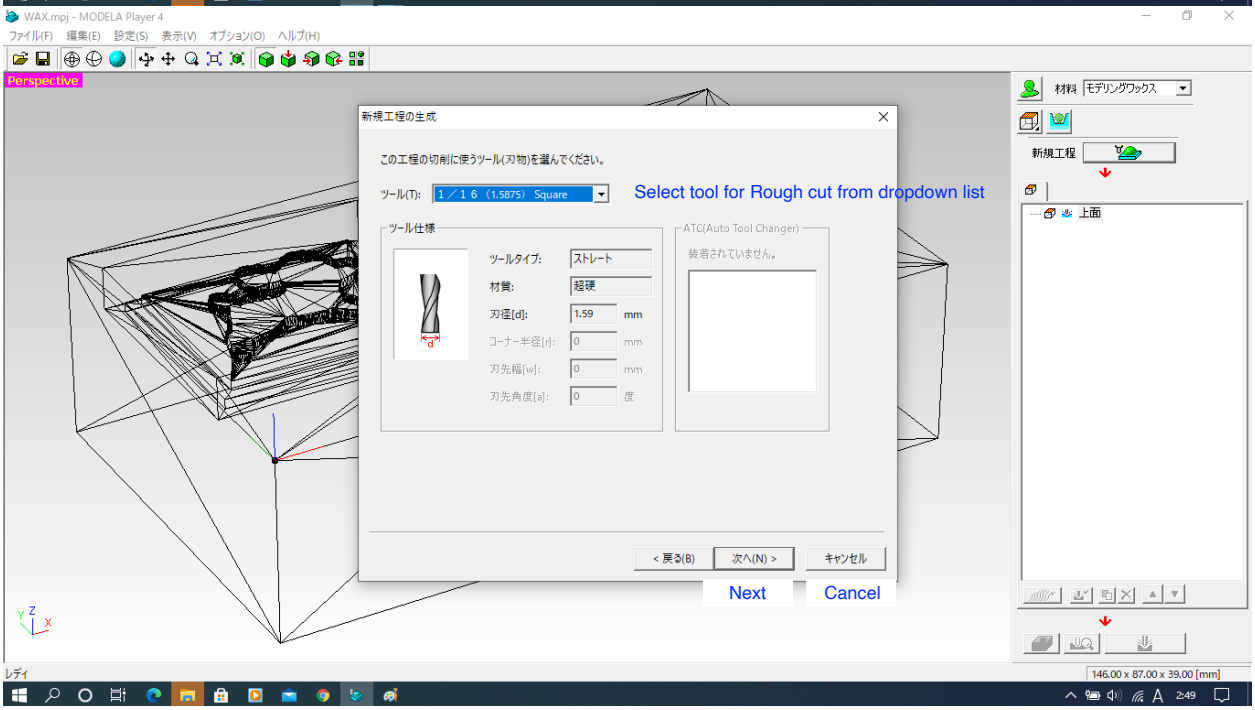

Select 1/16 Square from
dropdown list
Then Next

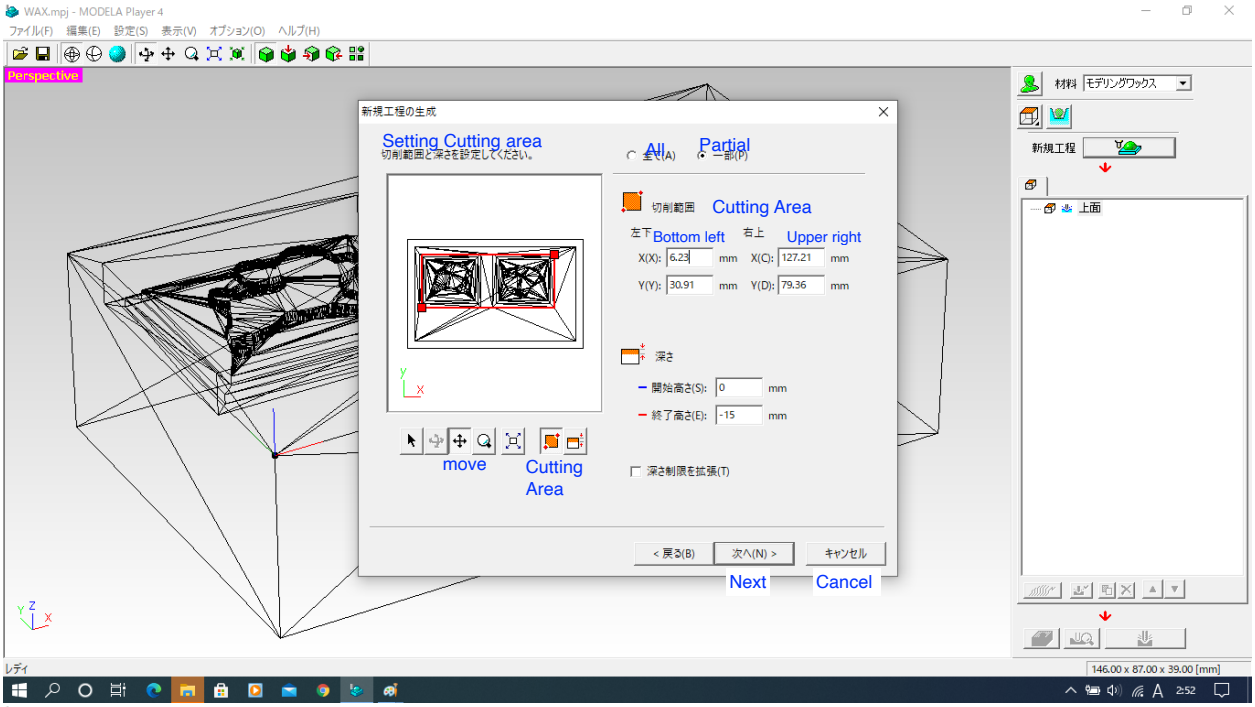

Select Partial, them select move and take red grid to set cutting area

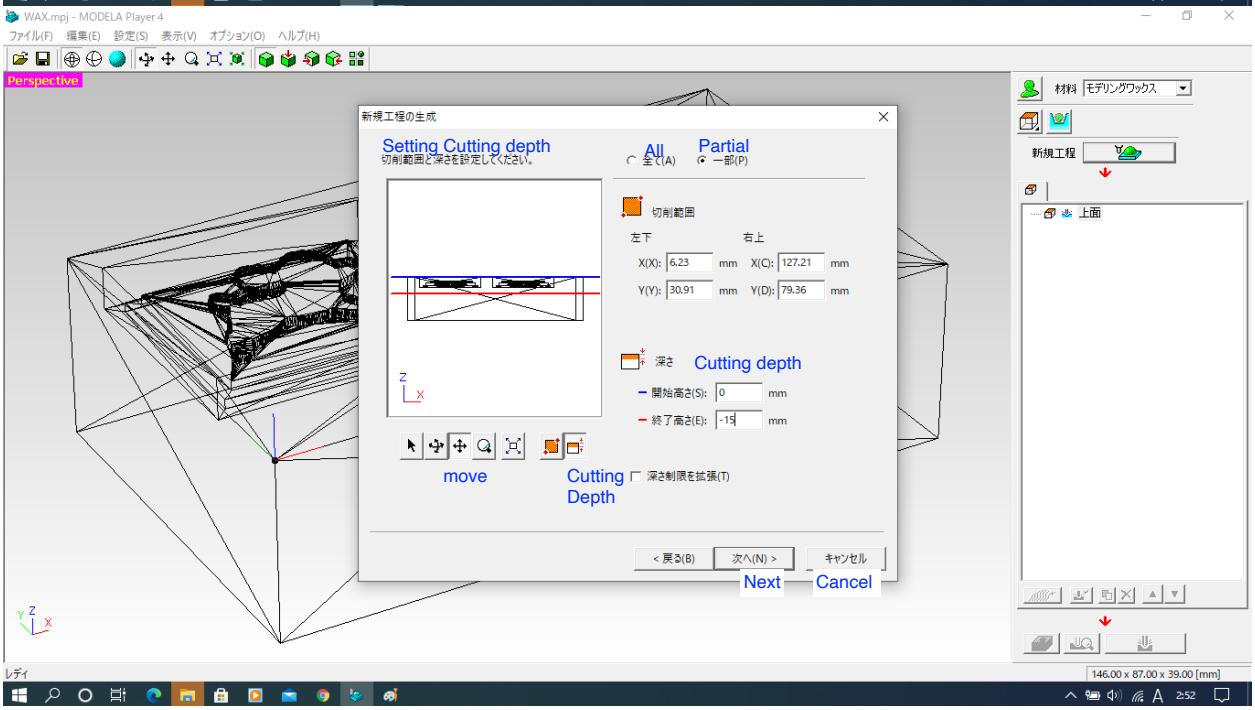

Take red bar to set cutting depth
Then Next

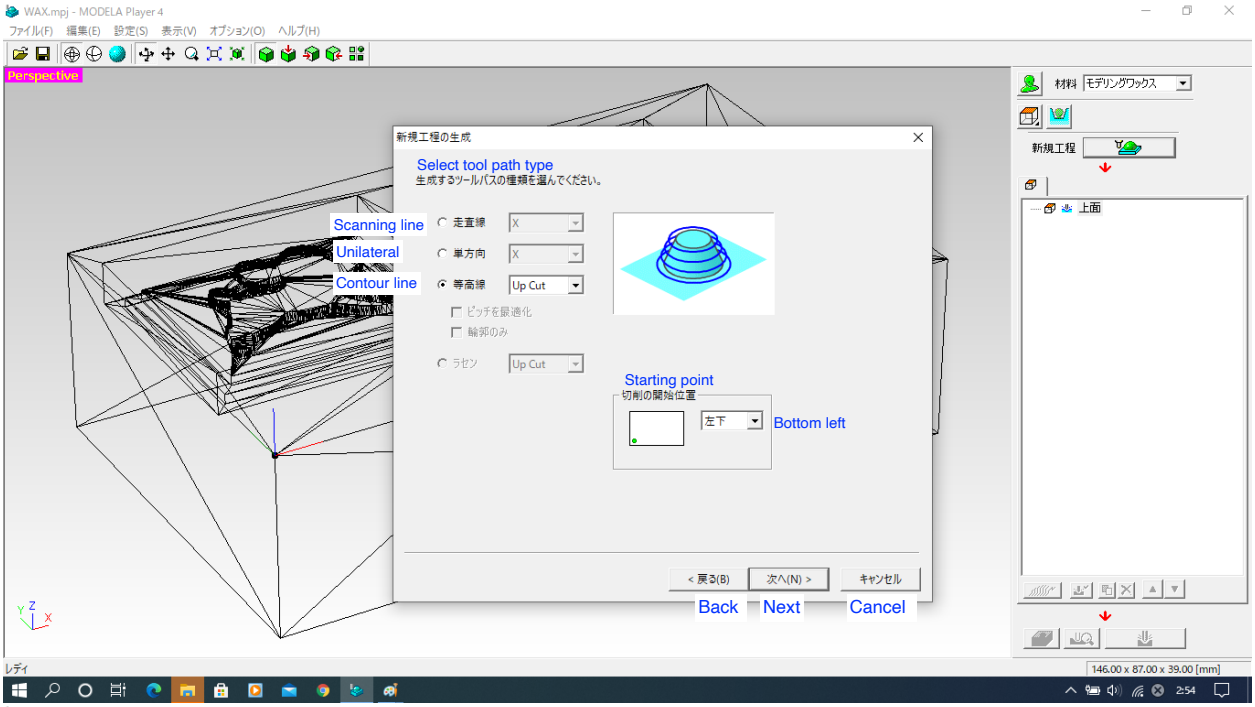

Select Contour line, then Next

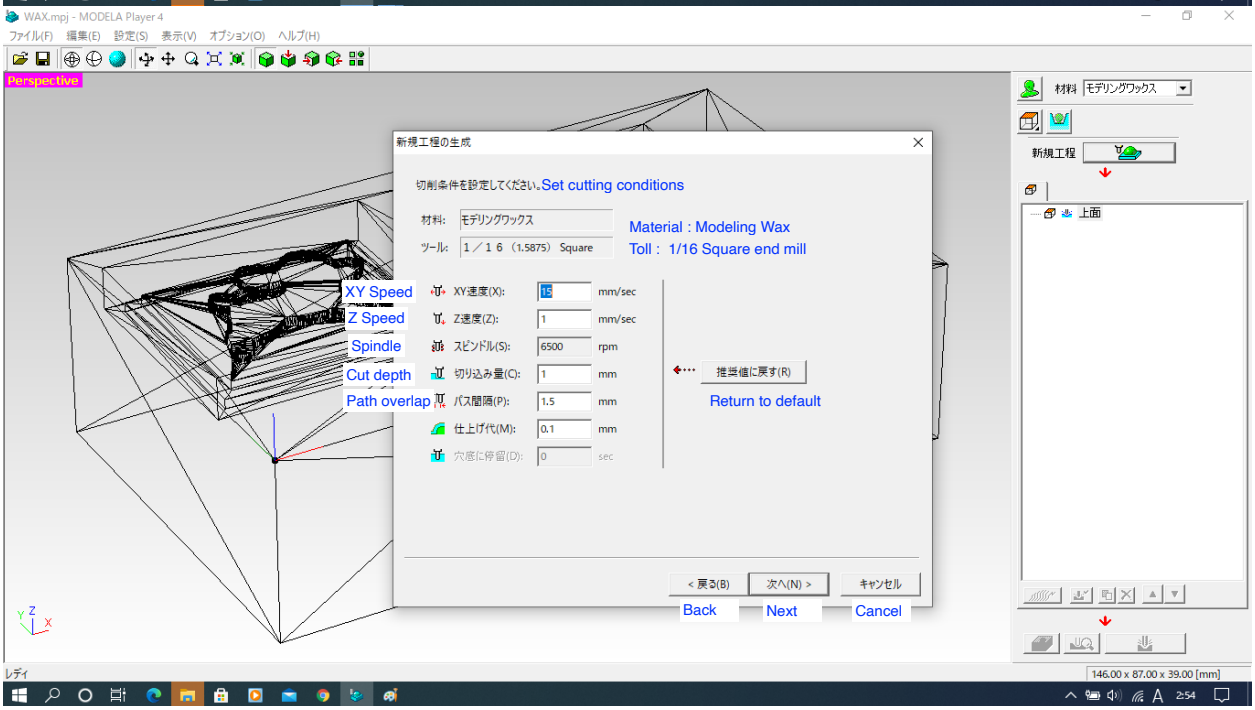

Set cutting condition. Changes added to default if necessary. Then Next

↑ At first try, I used default setting proposed, which has no overlapping, tool width 1.5875 mm and path width 1.5mm. Actually, it didn't work. Suspended operations due to lots of leftover. I changed width between paths from 1.5 mm to 0.75mm and restarted the process from the beginning.

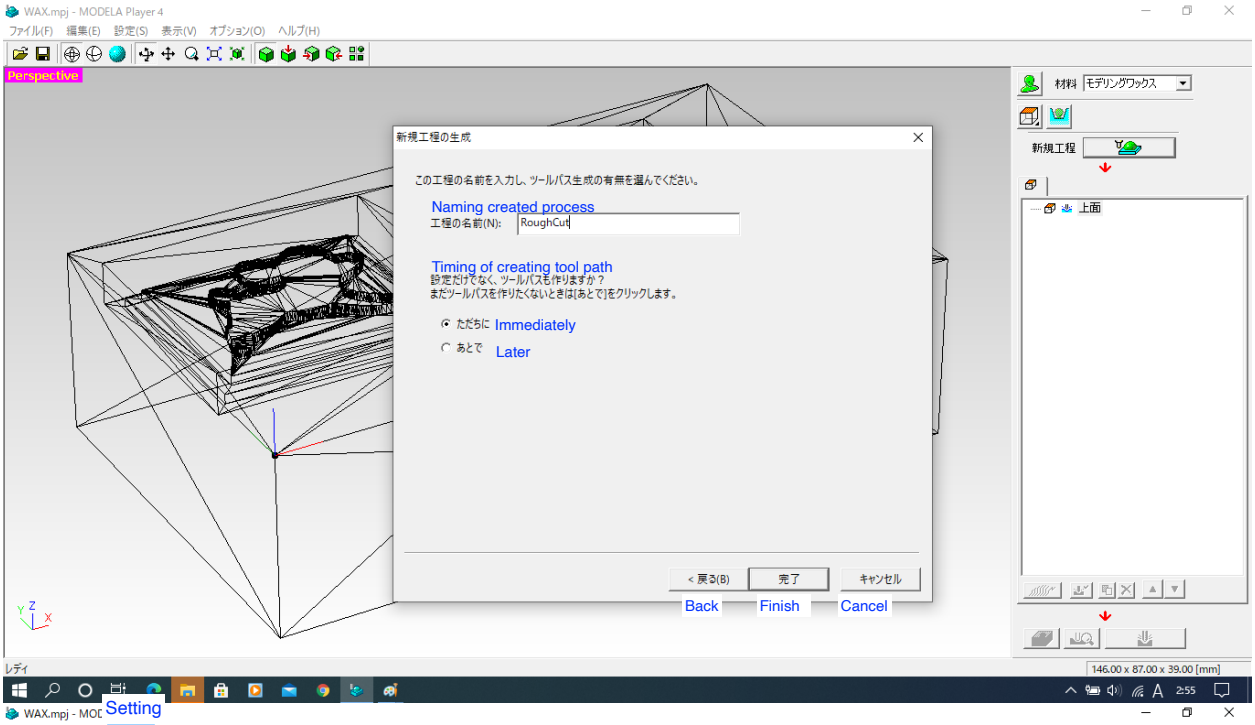

Naming created process and select Immediately to create Path Then Finish.

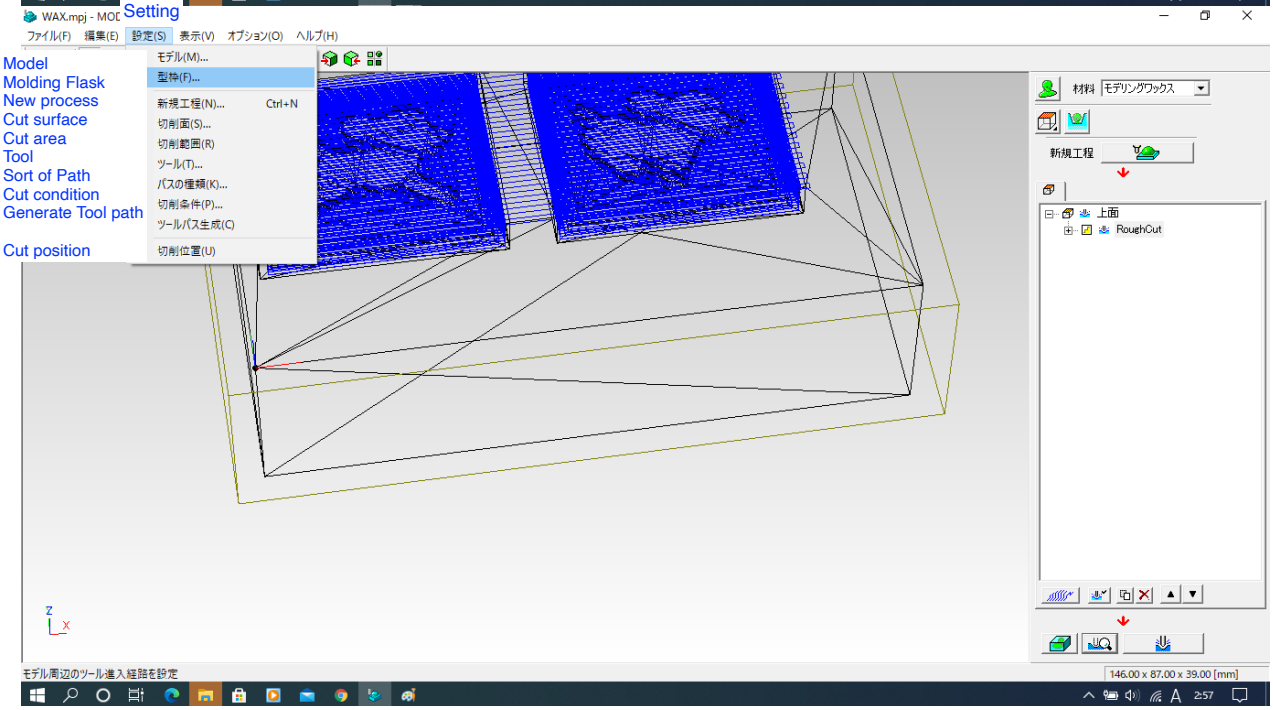

Select Setting menu
-> Molding Flask

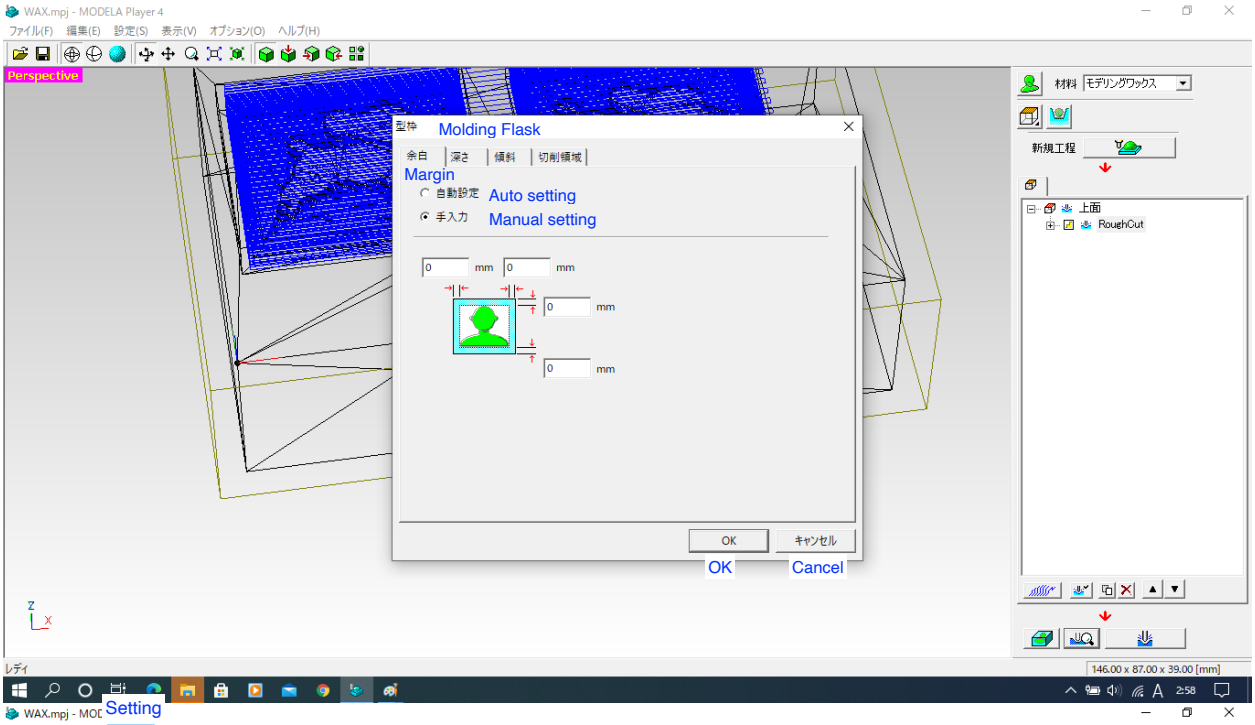

Set margins asl Zero
Then OK

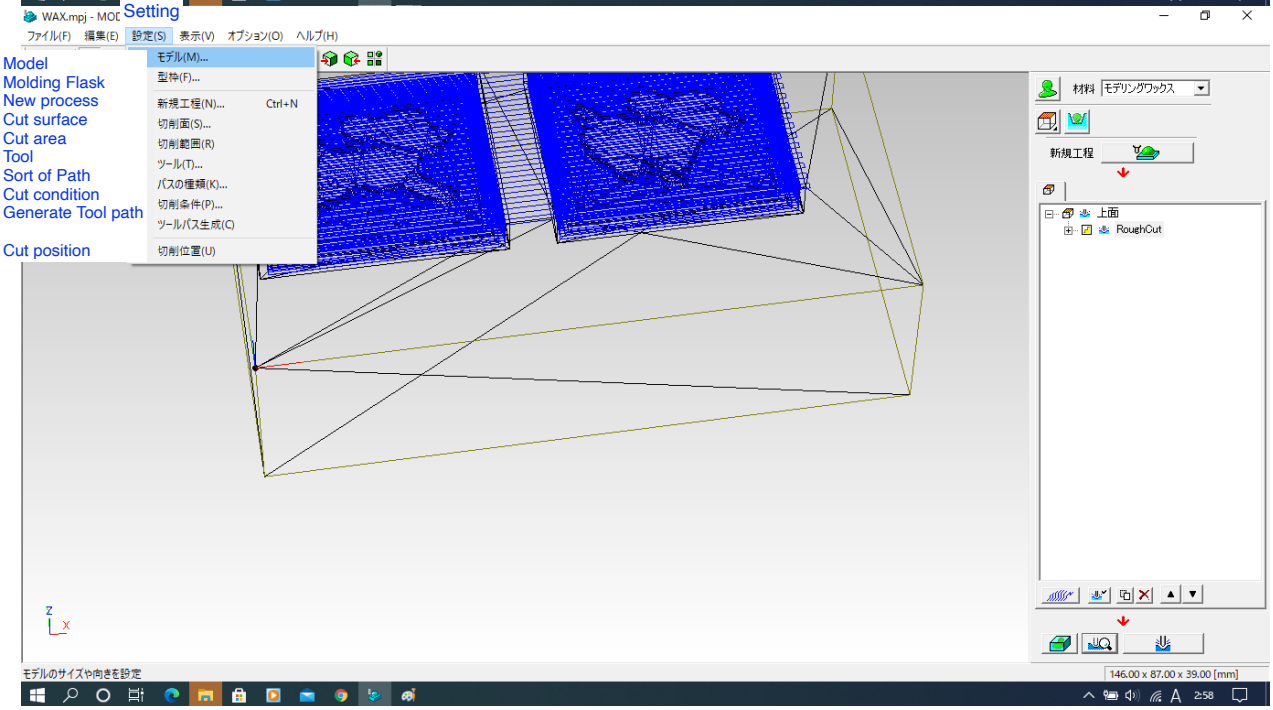

Model
Molding Flask
New process
Cut surface
Cut area
Tool
Sort of Path
Cut condition
Generate Tool path

Cut position

Select Model from setting menu

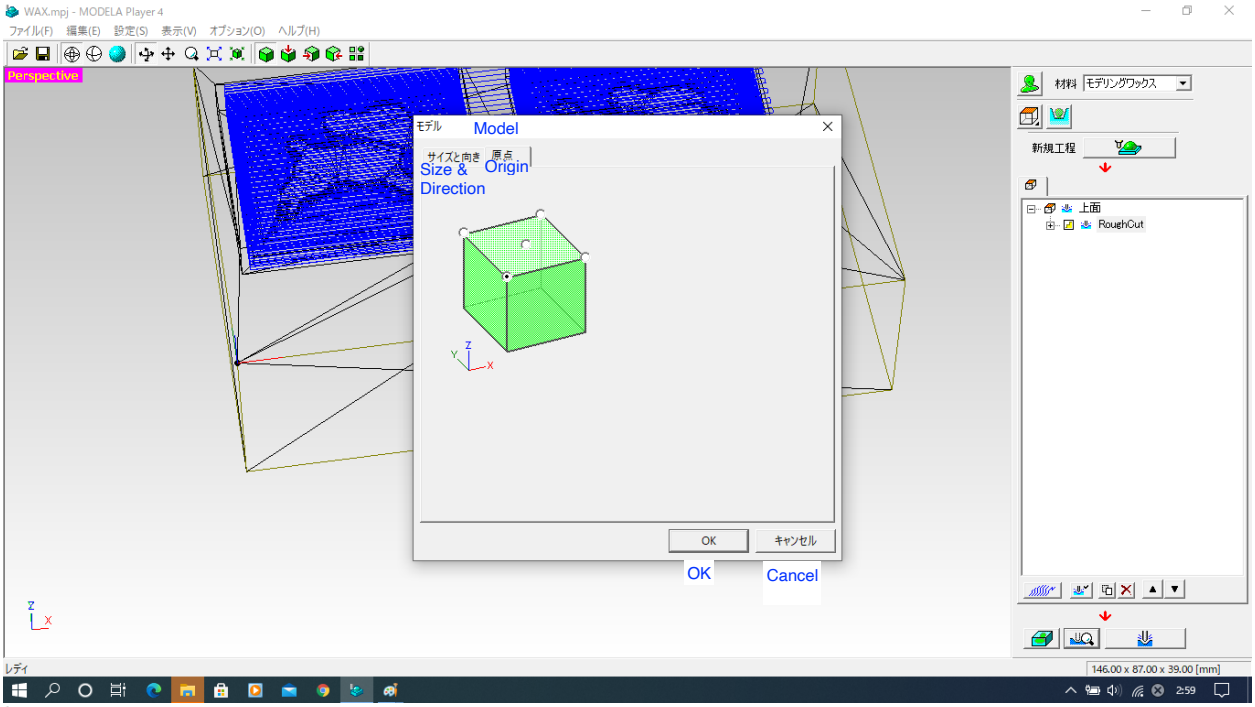

Select Origin and confirm the origin
as left bottom corner.
Then OK

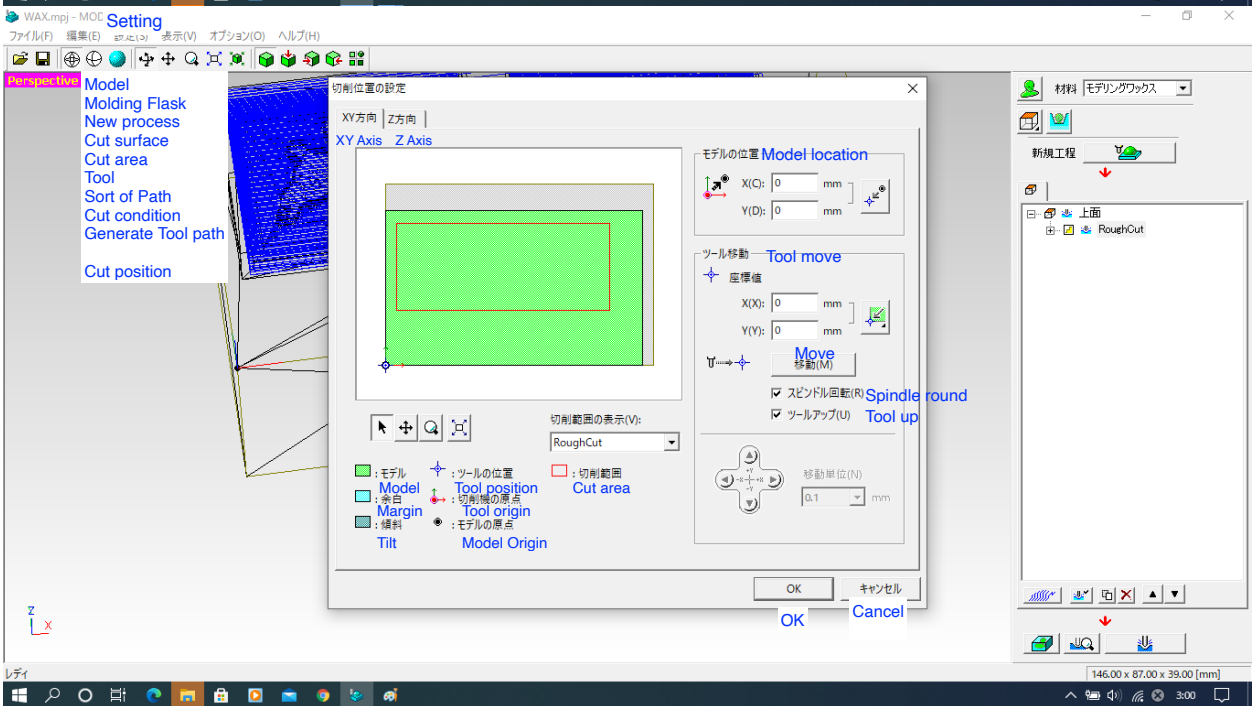

Select Cut position at the bottom
of Setting menu
Set zero to Z axis
Then OK

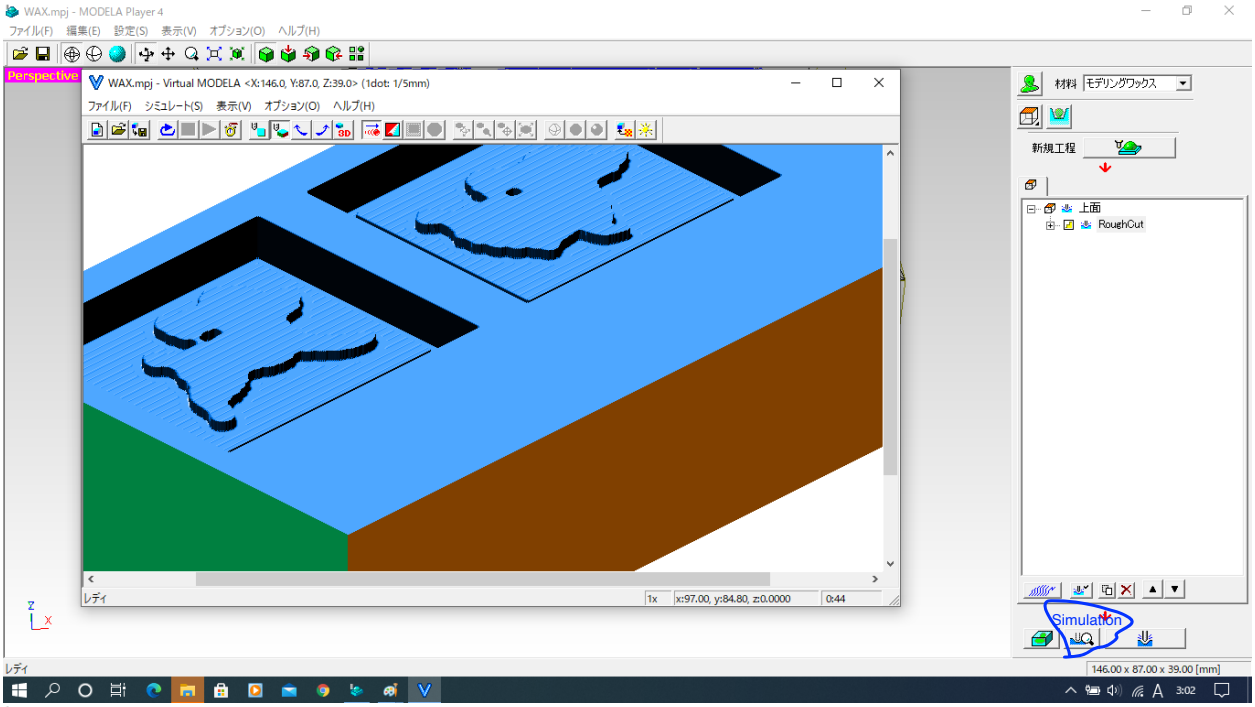

Press Simulation bottom and Virtual MODELA shows simulated Rough cut.

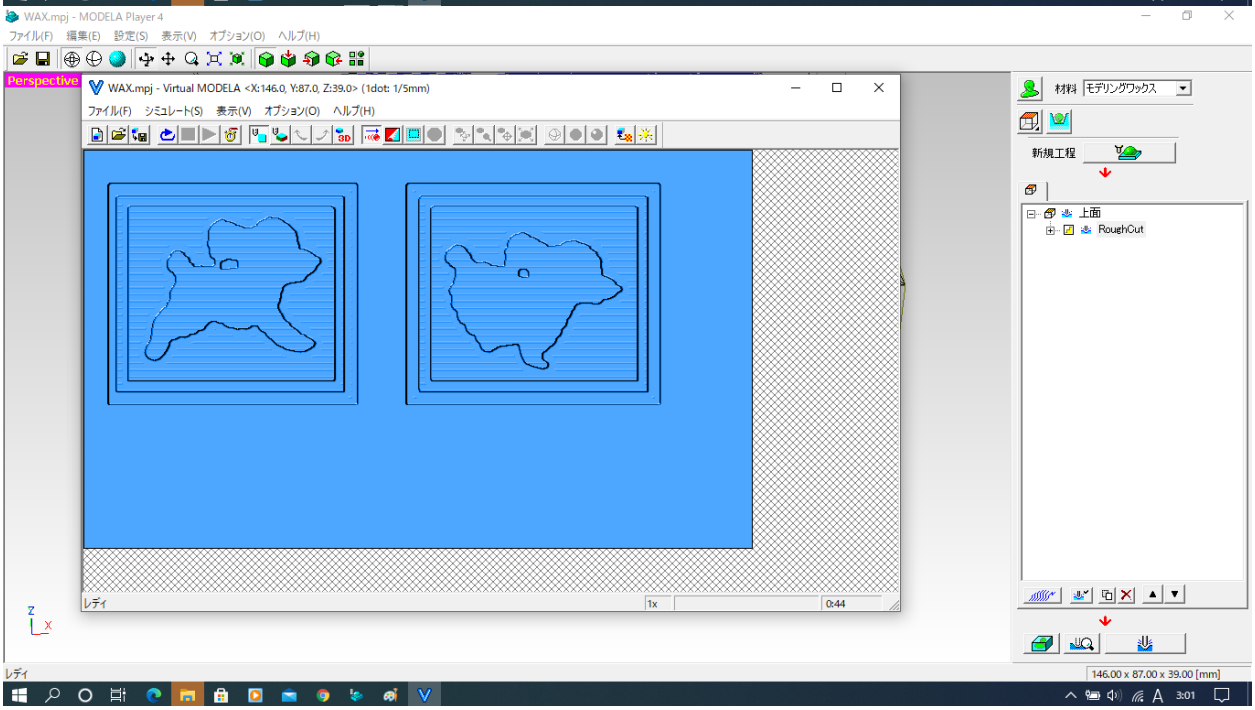

Upside view

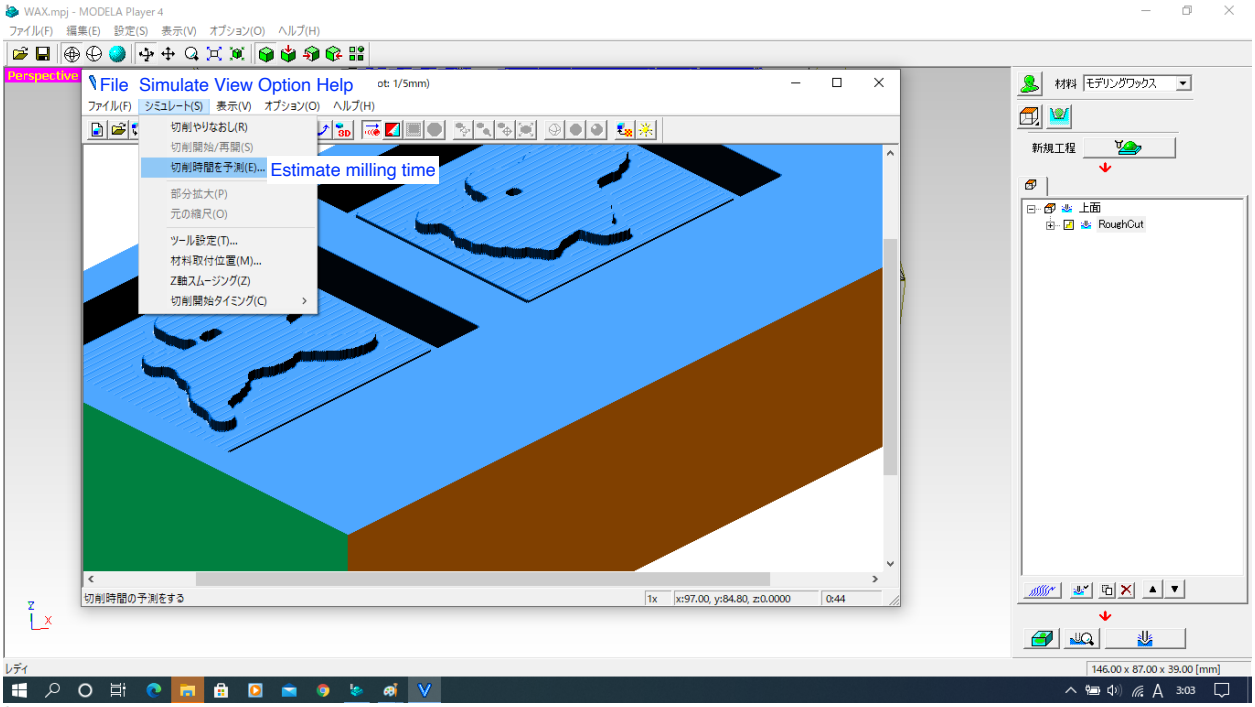

Select Simulate from Virtual Modela menu.

Then select Estimate milling time.

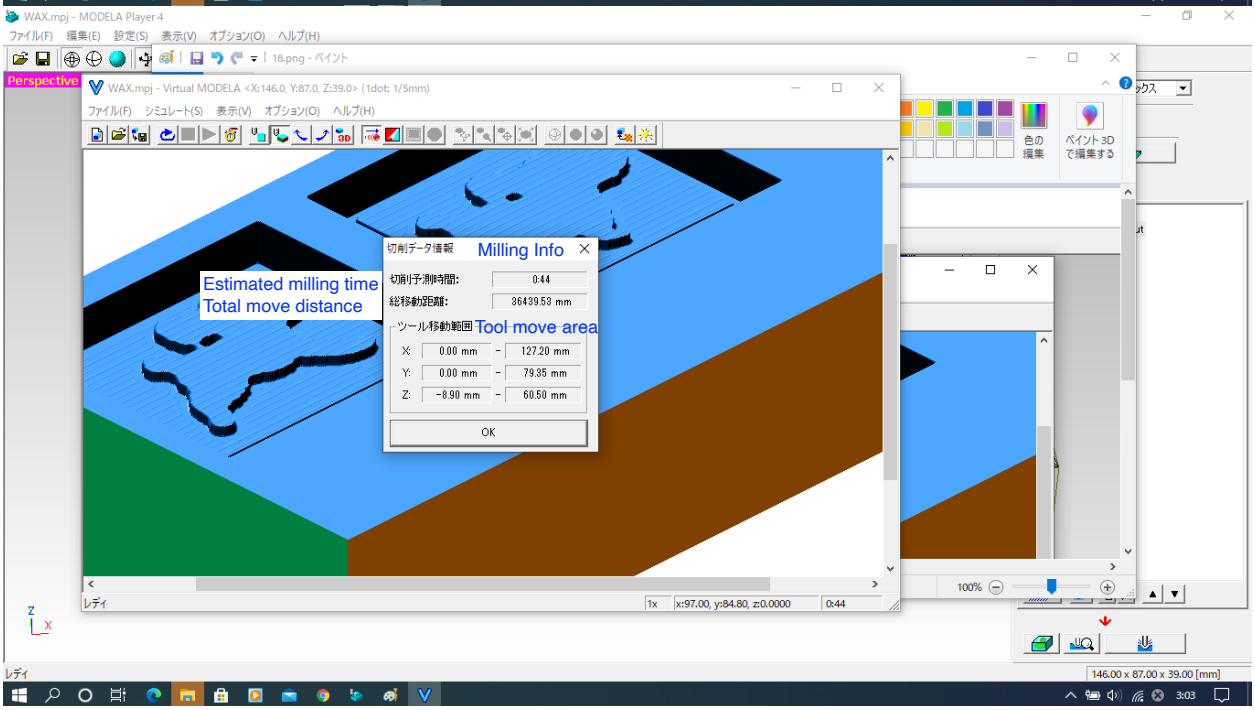

Milling Info box popped up
Confirm then OK

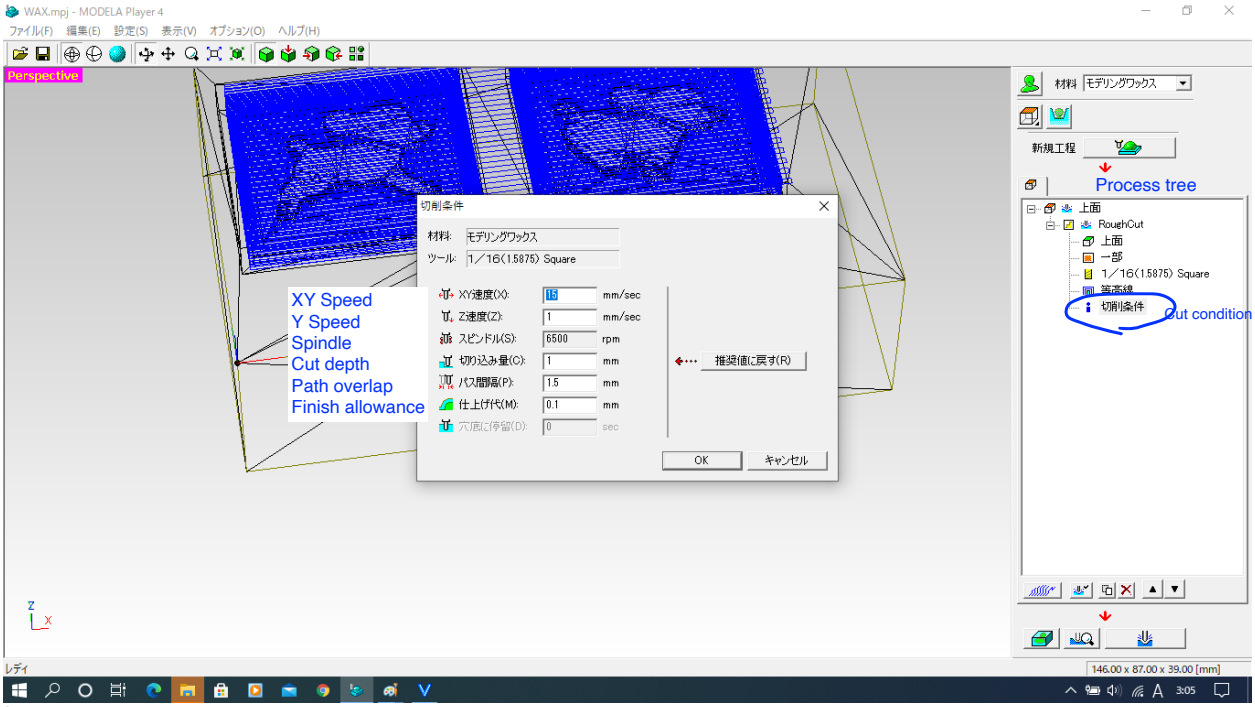

By clicking cut condition, I can reconfirm details of cut condition.
Then OK

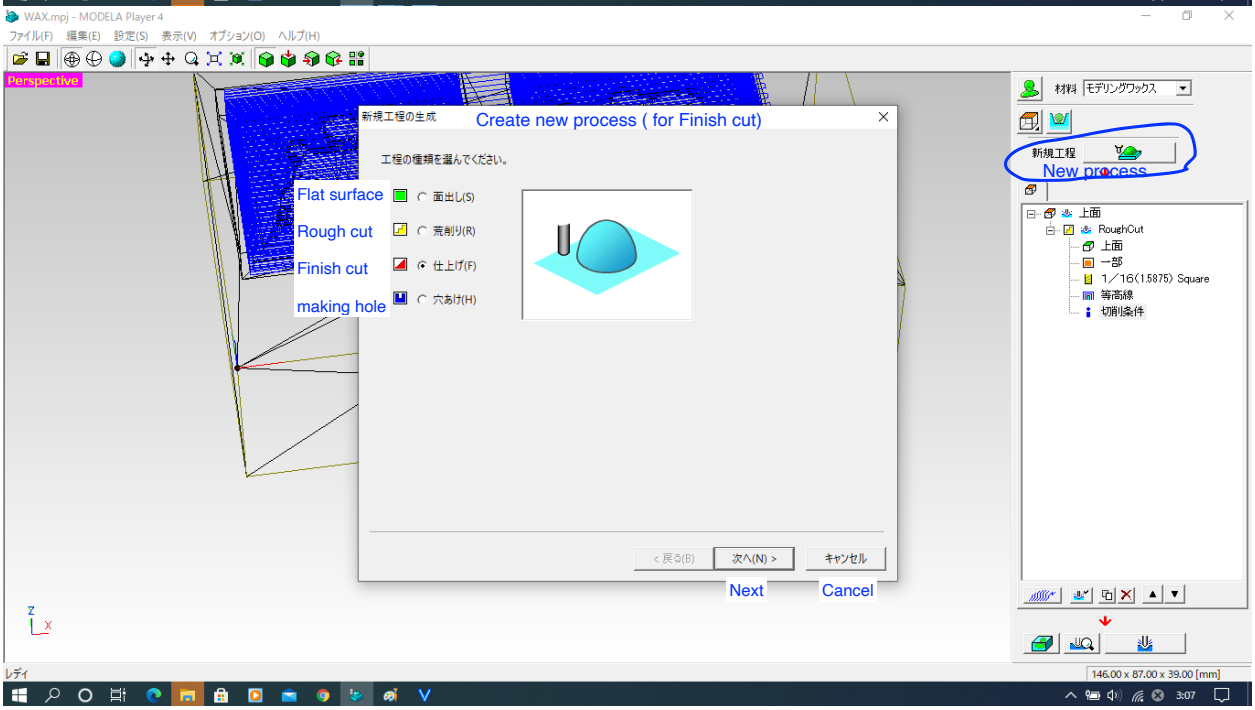

Press new process
Select Finish Cut
Then Next

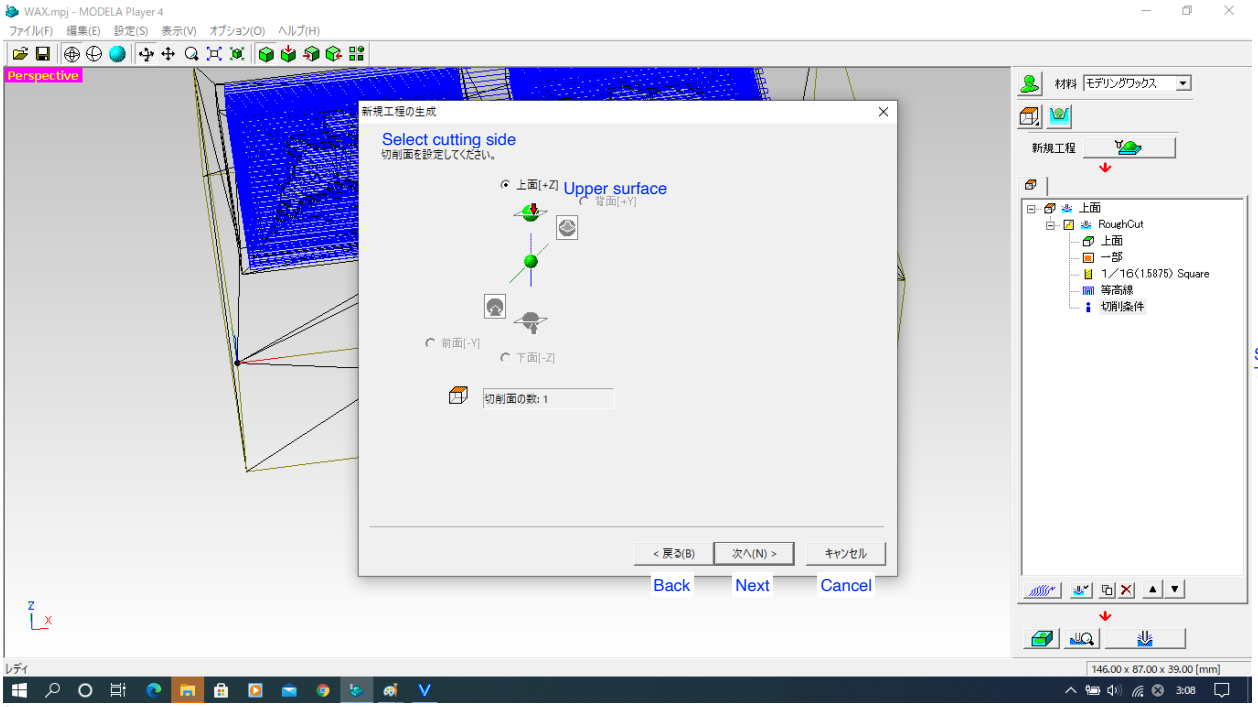

Select Upper surface as cutting side
Then Next

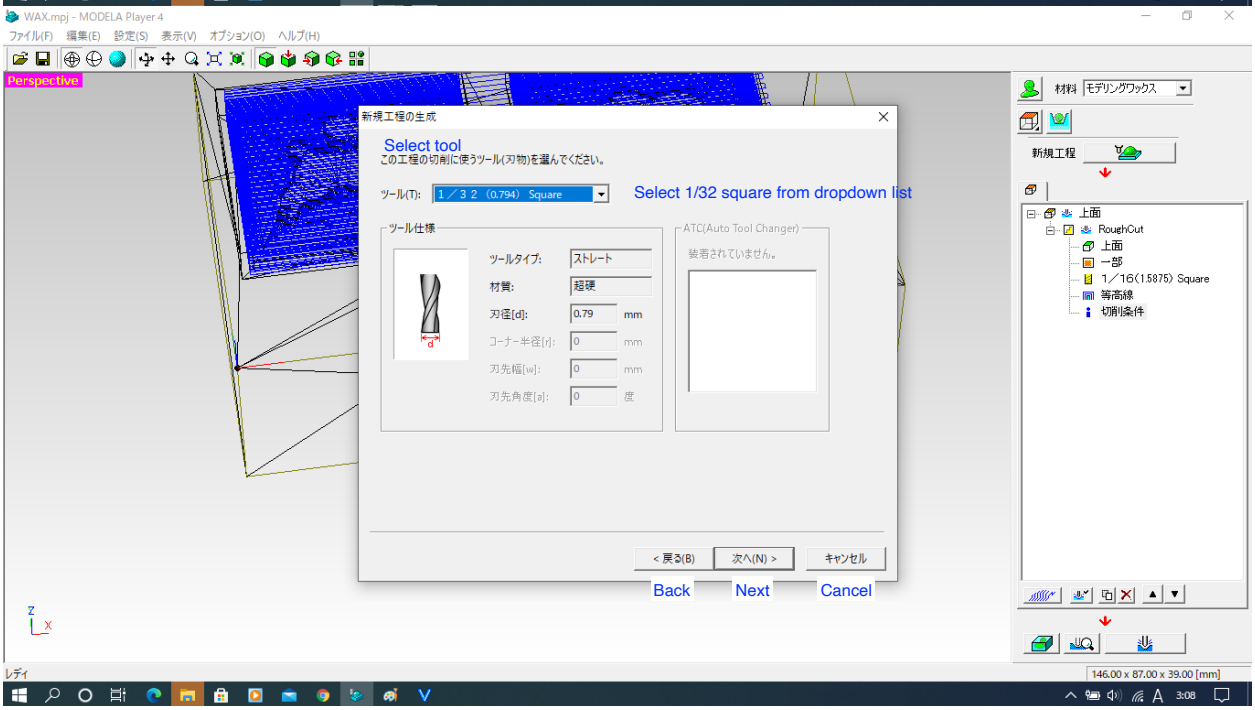

Select 1/32 square
Then Next

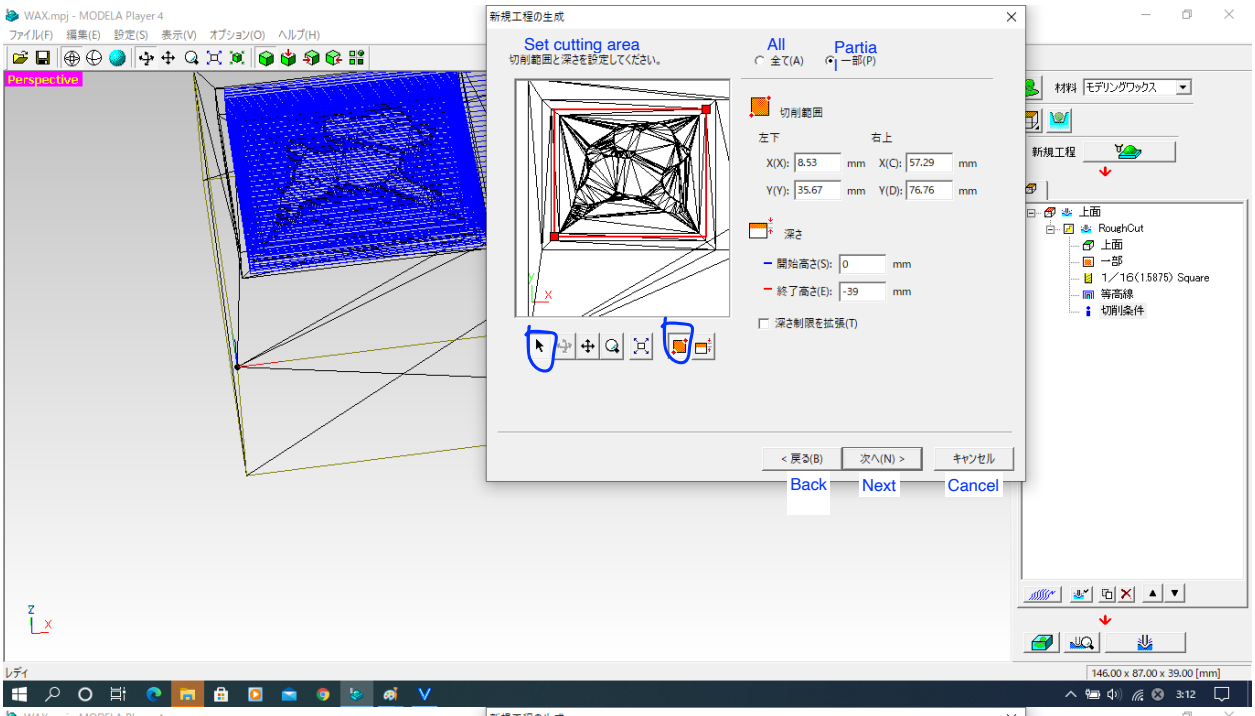

Set cutting area as Partial.
Adjust area by moving red grid.
Then Next

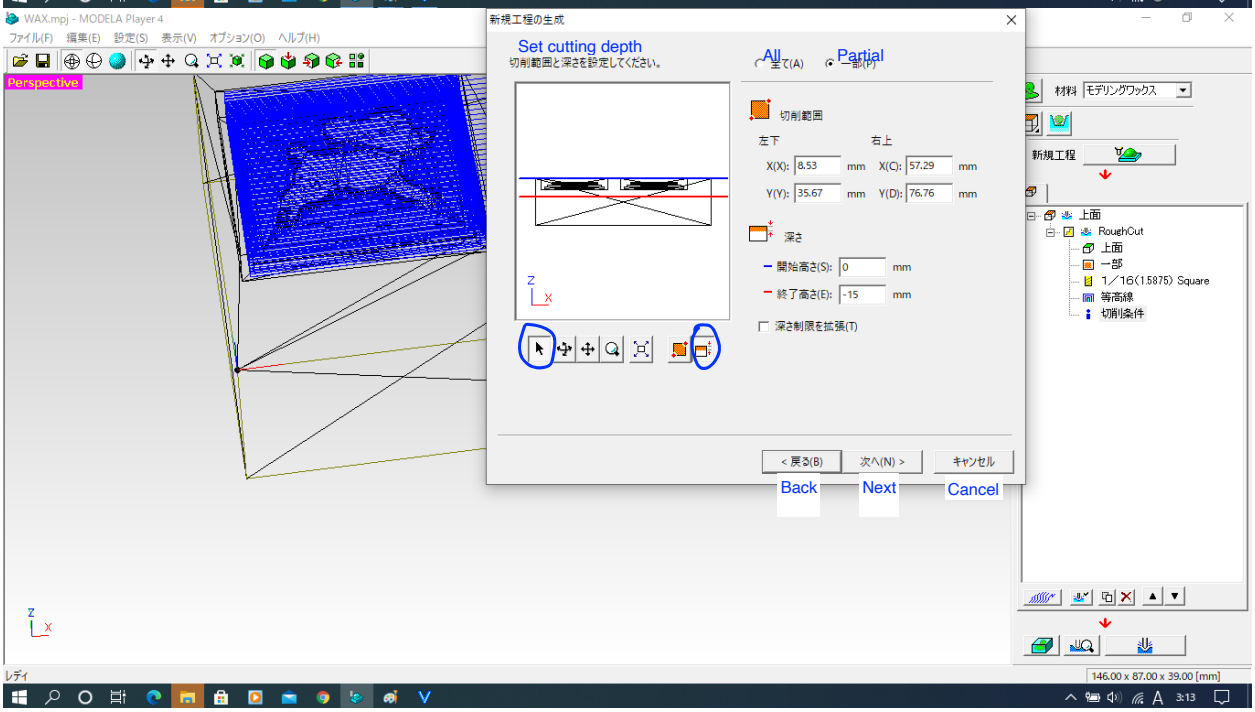

Set cutting depth as Partial.
Adjust depth by moving red bar.
Then Next

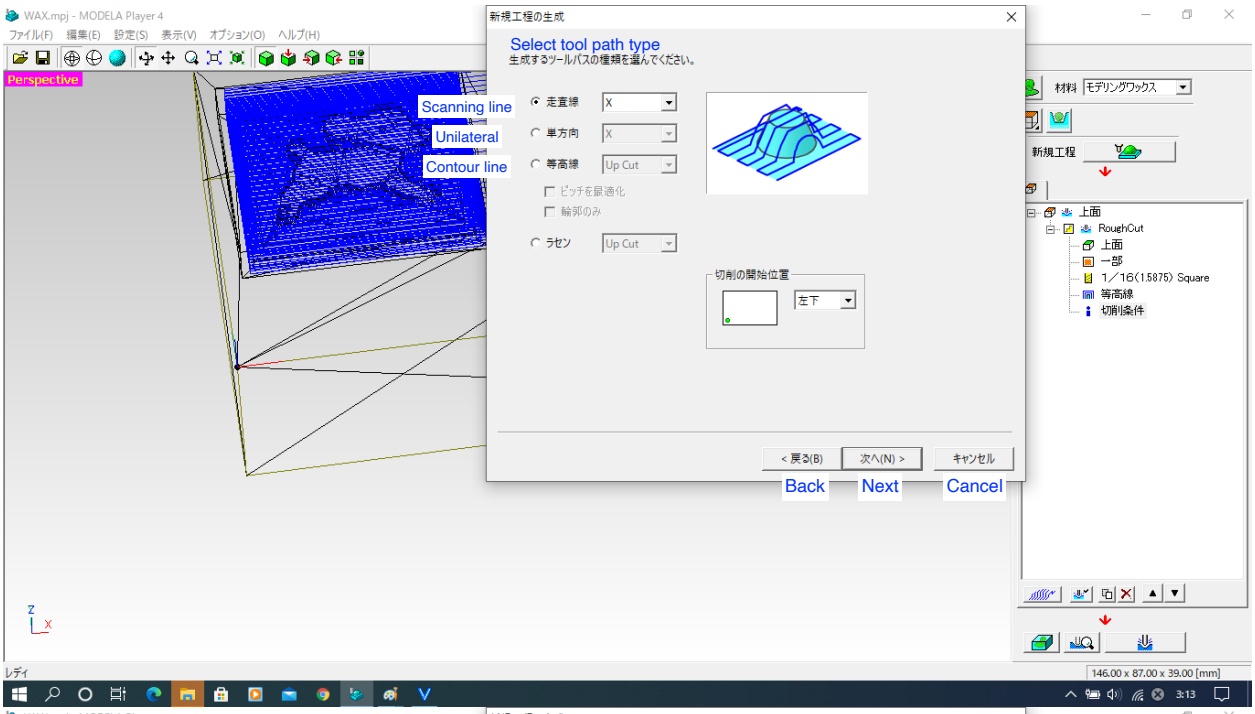

Select Scanning Line as tool path
for Finish cut
Then Next

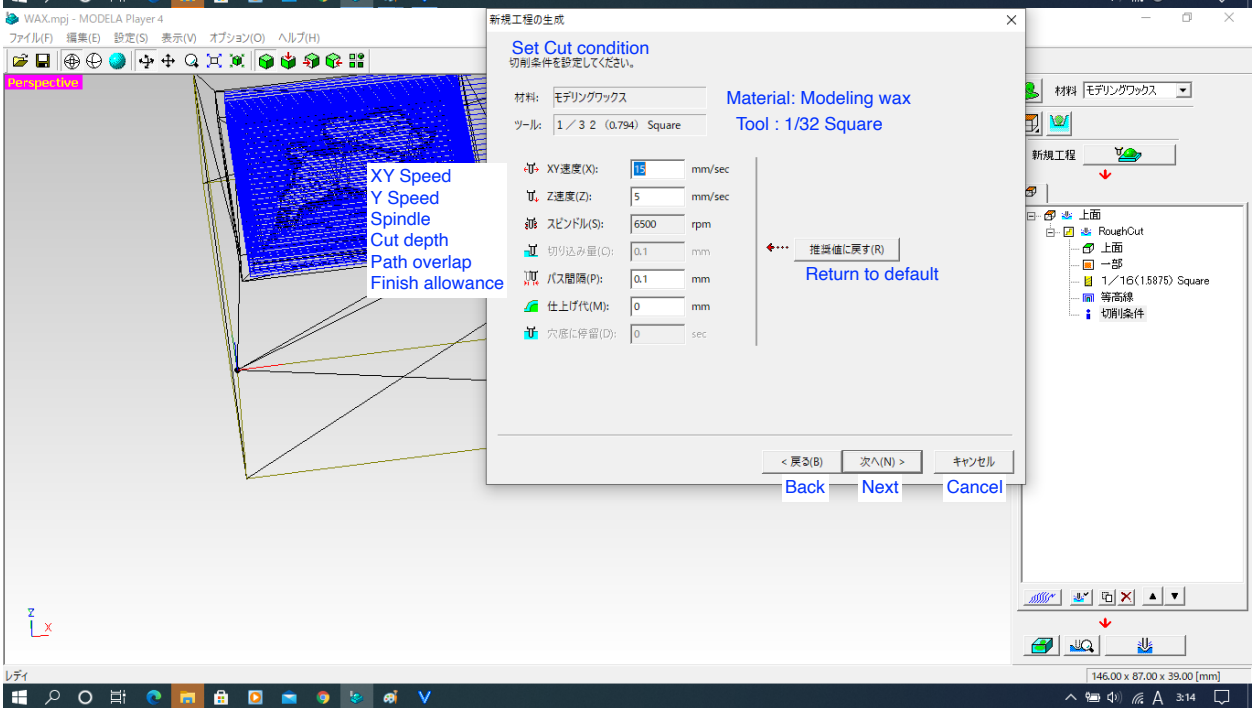

Default setting shown.
If necessary, adjust numbers.
Then Next

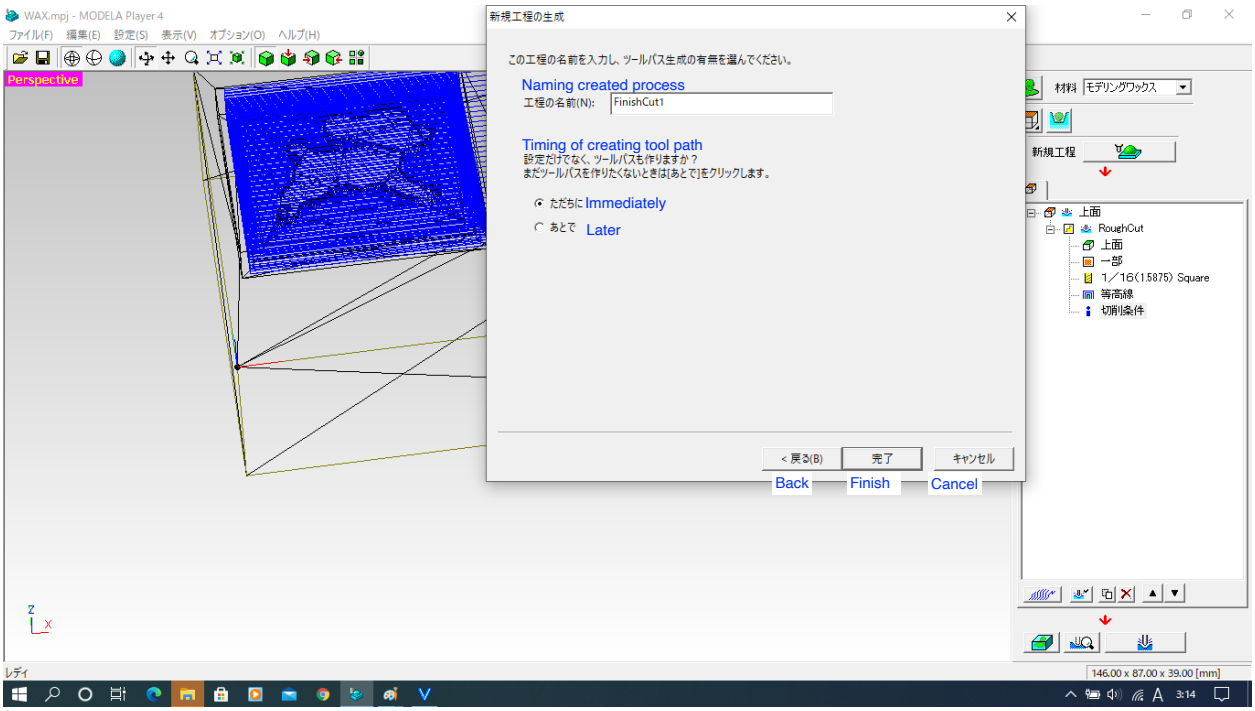

Give a name to created process
Select immediately as timing of creating tool path
Then Next

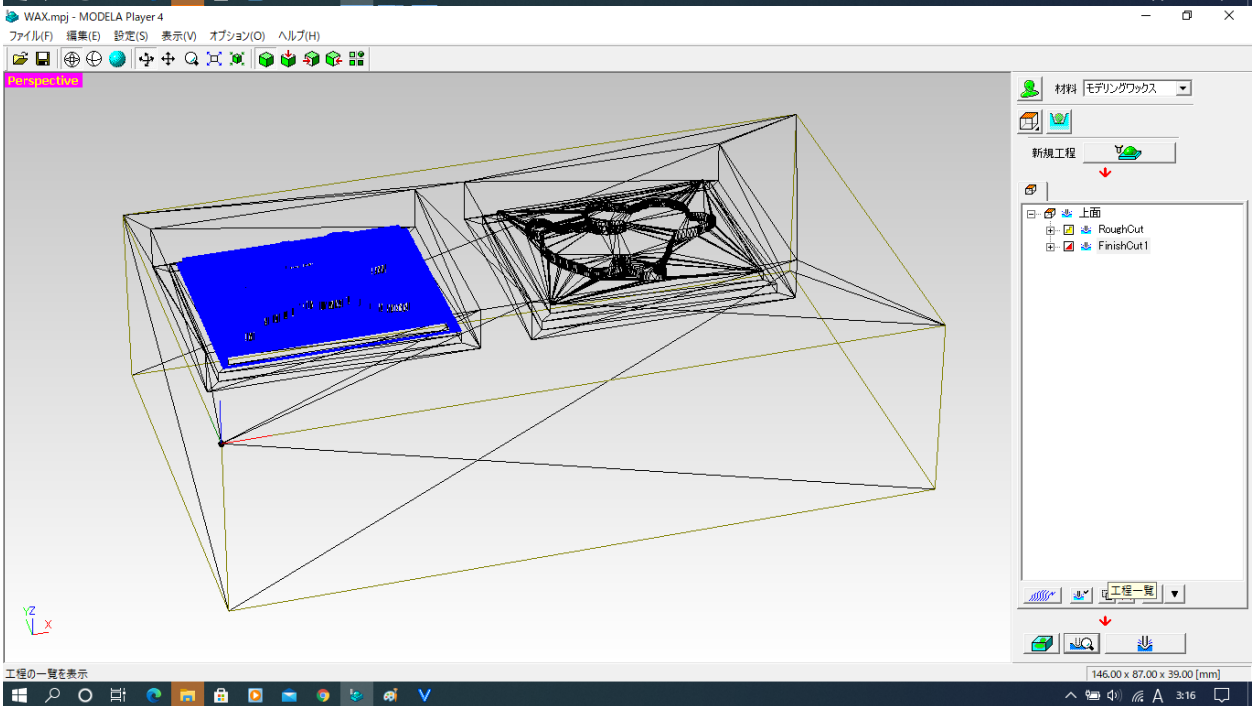

Two processes created, Rough & Finish1 (left part. Repeat the same for the right part as Finish2)

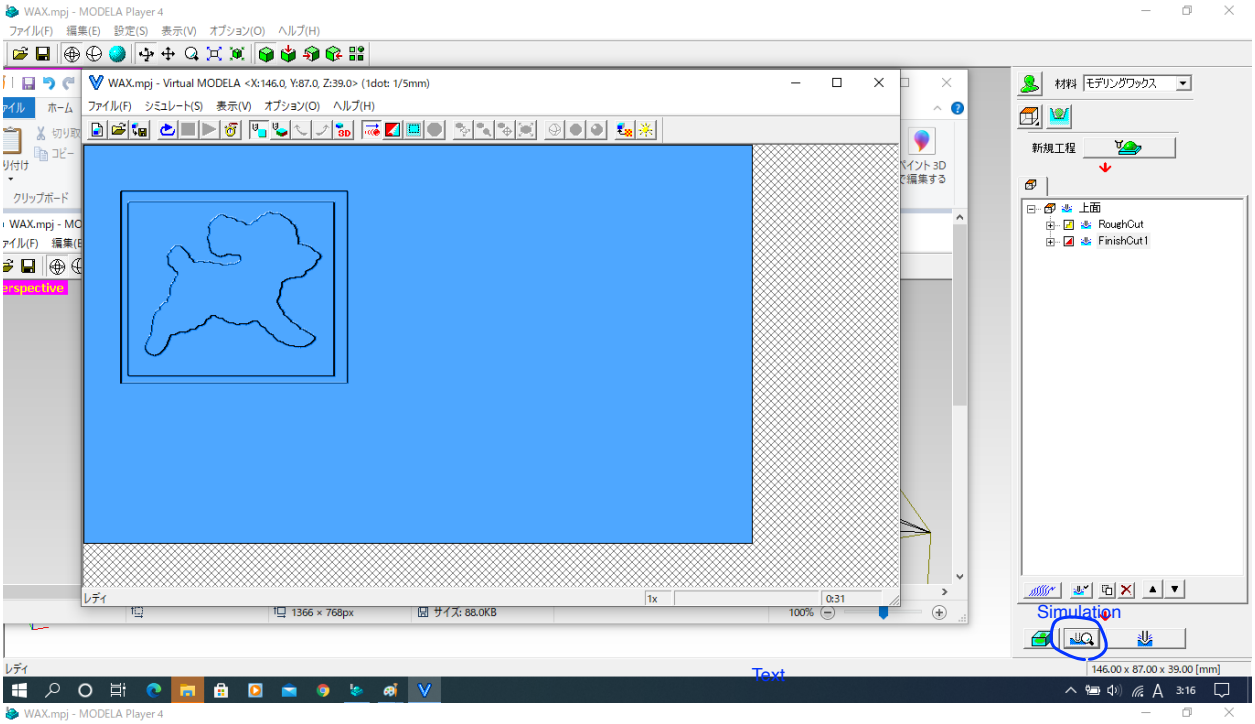

Press simulation to activate
Virtual MODELA to see simulation

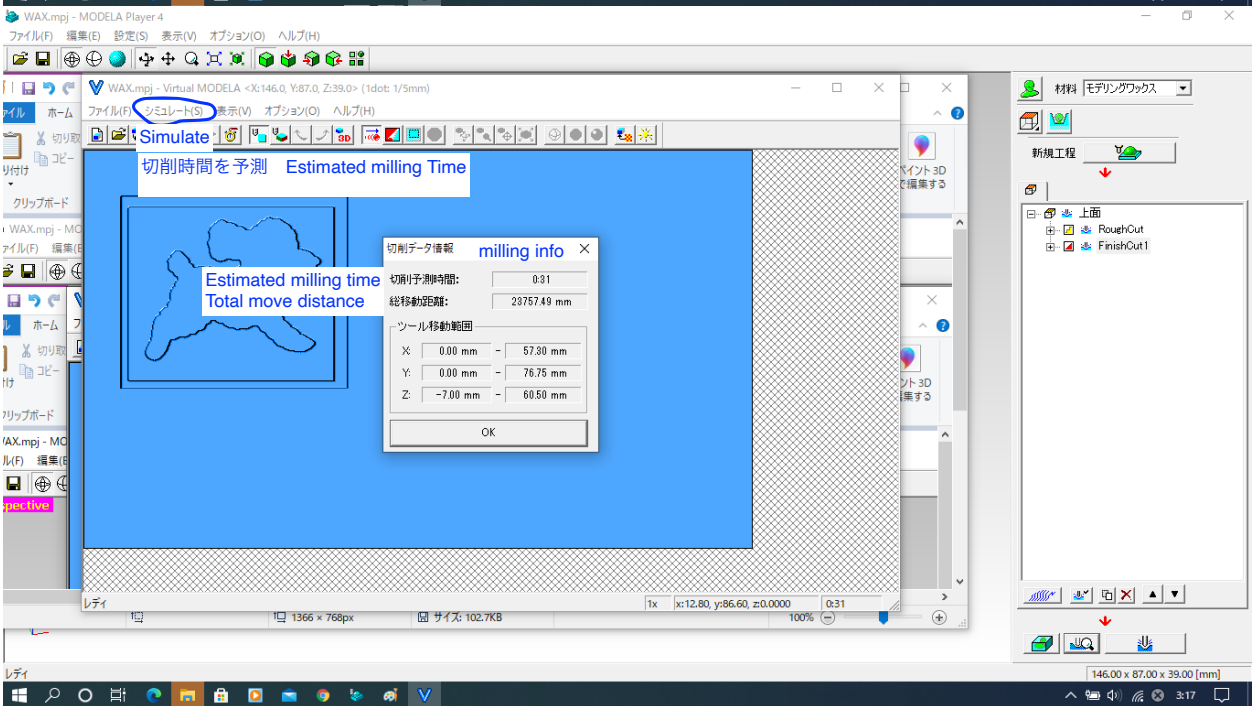

Select Simulate in
Virtual MODELA menu
Select Estimated milling time
Milling info box popped up
Confirm, then OK

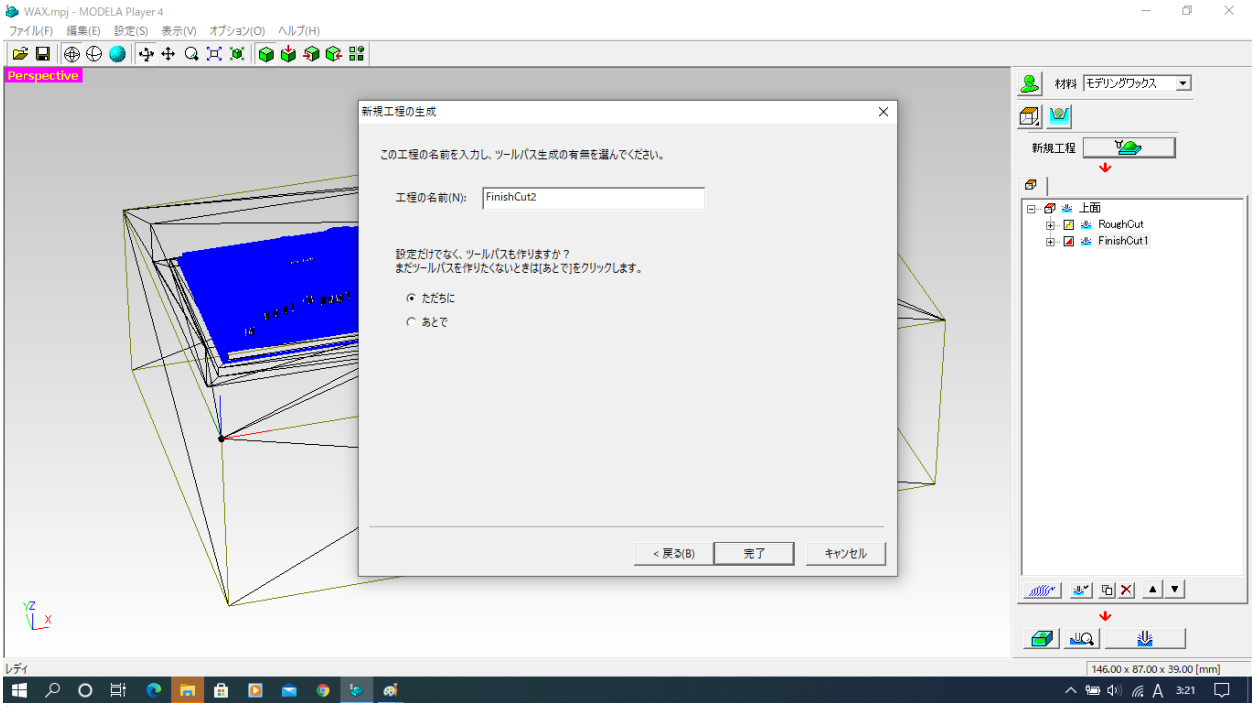

Do the same as Finish Cut process setting for Right Part and name as FinishCut2

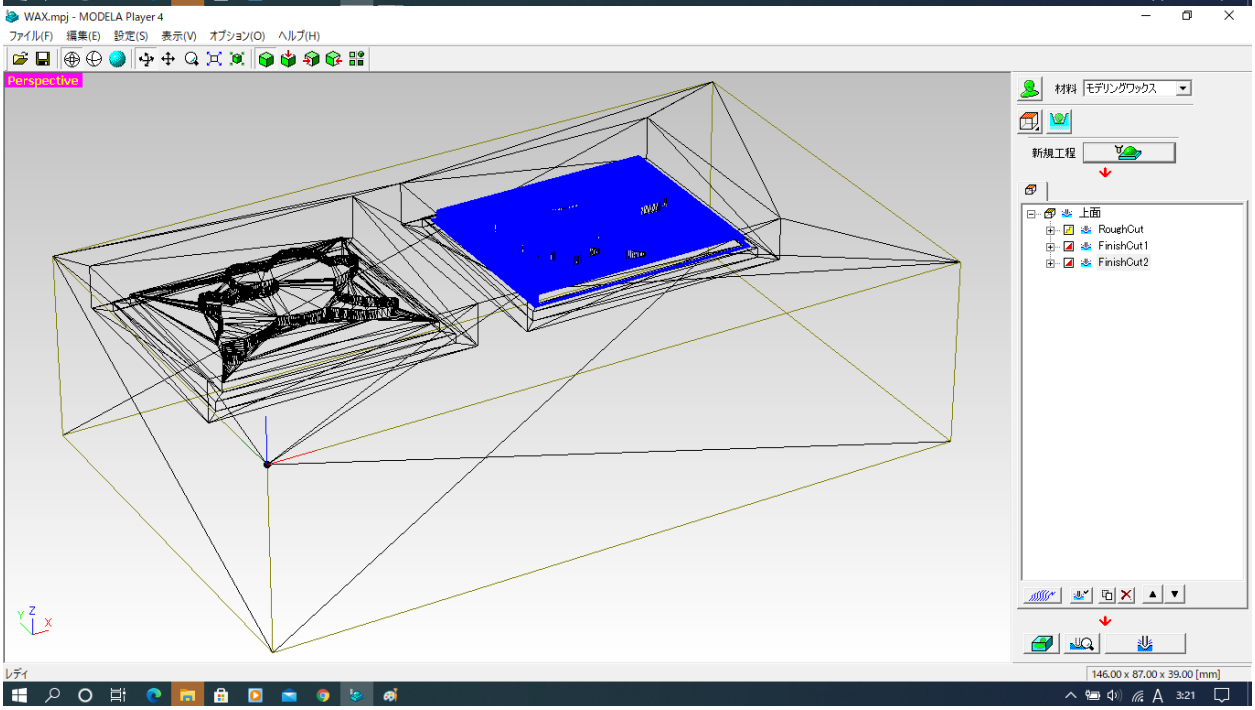

3 processes created

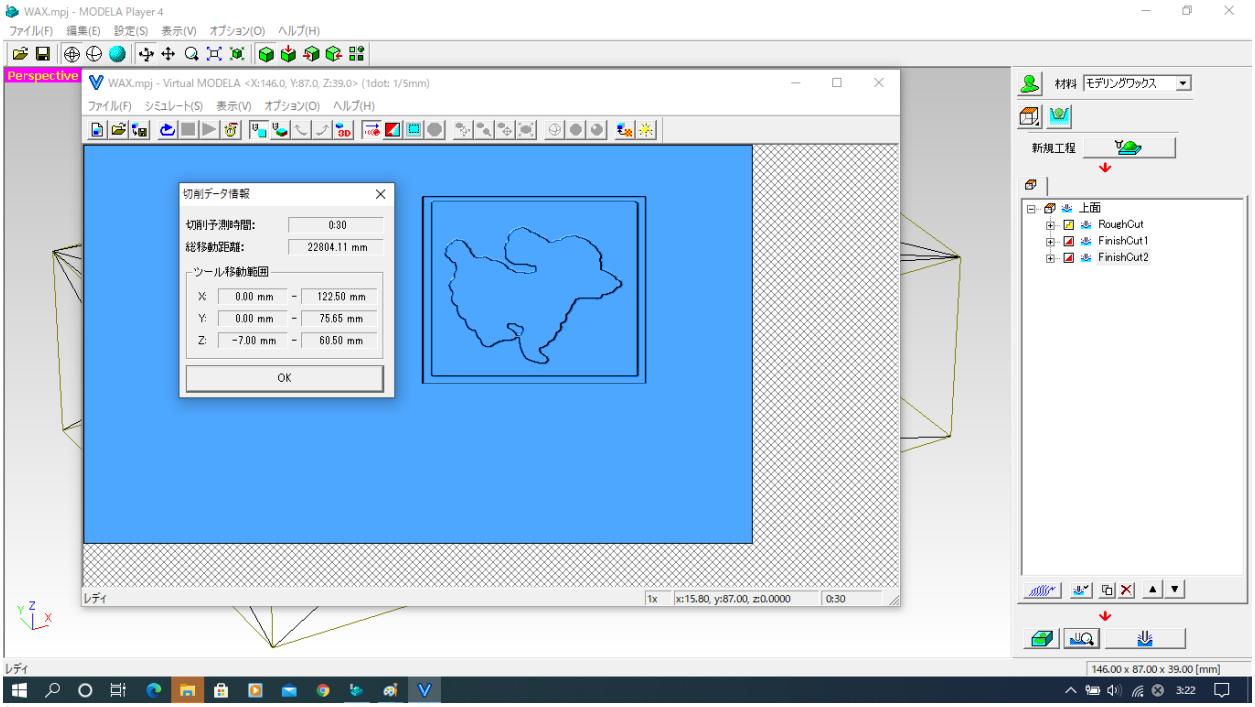

Simulate FinishCut2

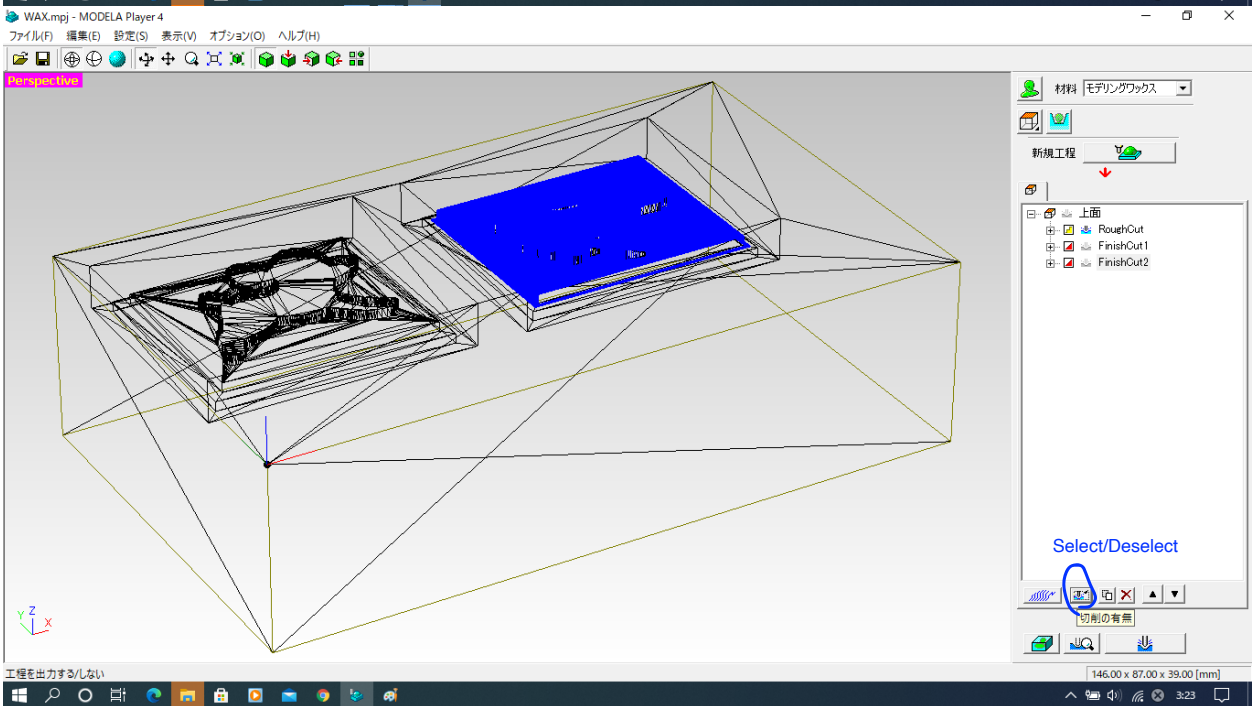

The process should be run one by one.
To do this, click each process to select / deselect.
Selected process has blue icon left side of process names.
RoughCut selected

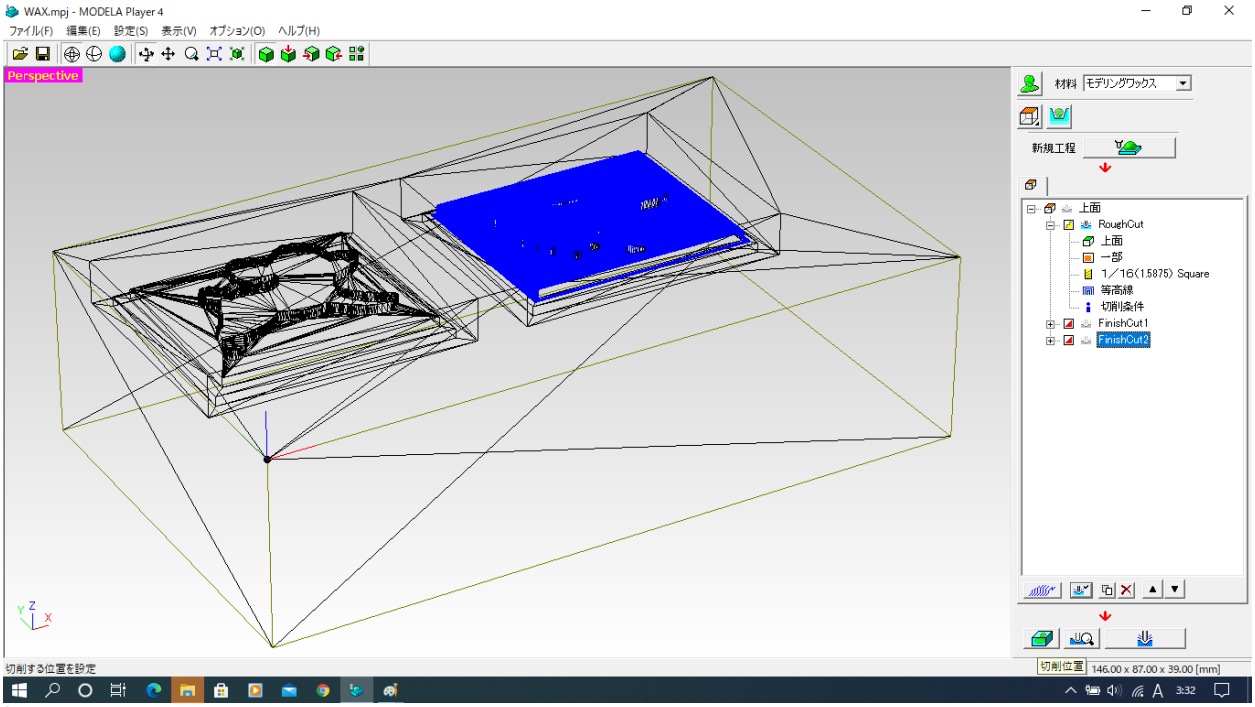

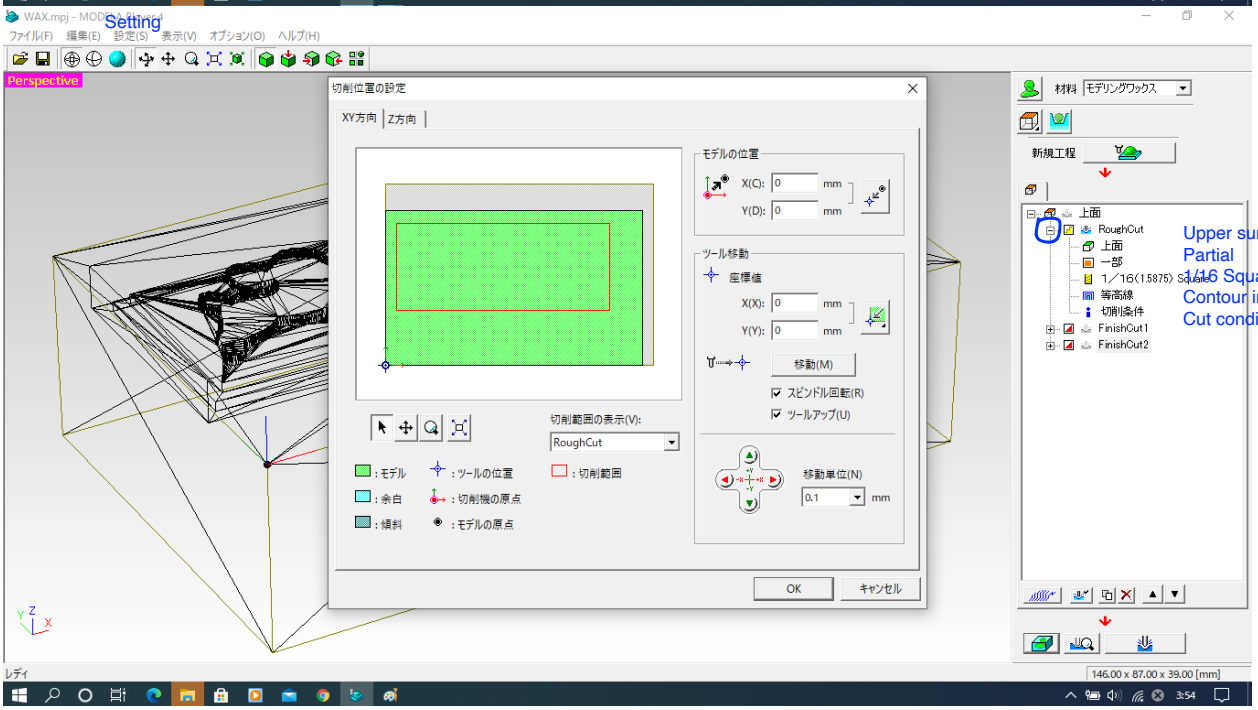

Clicking “+” mark of RoughCut
unfold the process setting list.
Double clicking the item on the tre
I can see details.

Upper surface
Partial
1/16 Square end mill
Contour ine
Cut condition

To reconfirm XY & Z axis,
go to Setting(s) and select positi
setting at bottom.

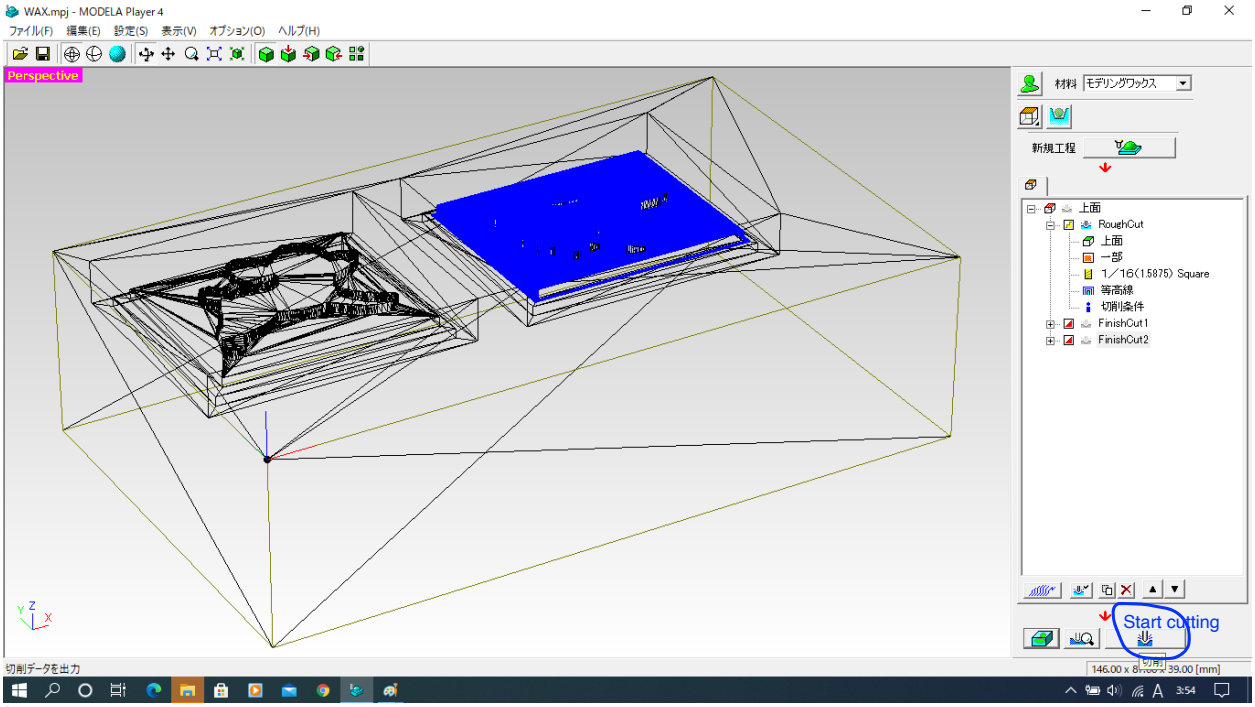

Press Start cutting bottom

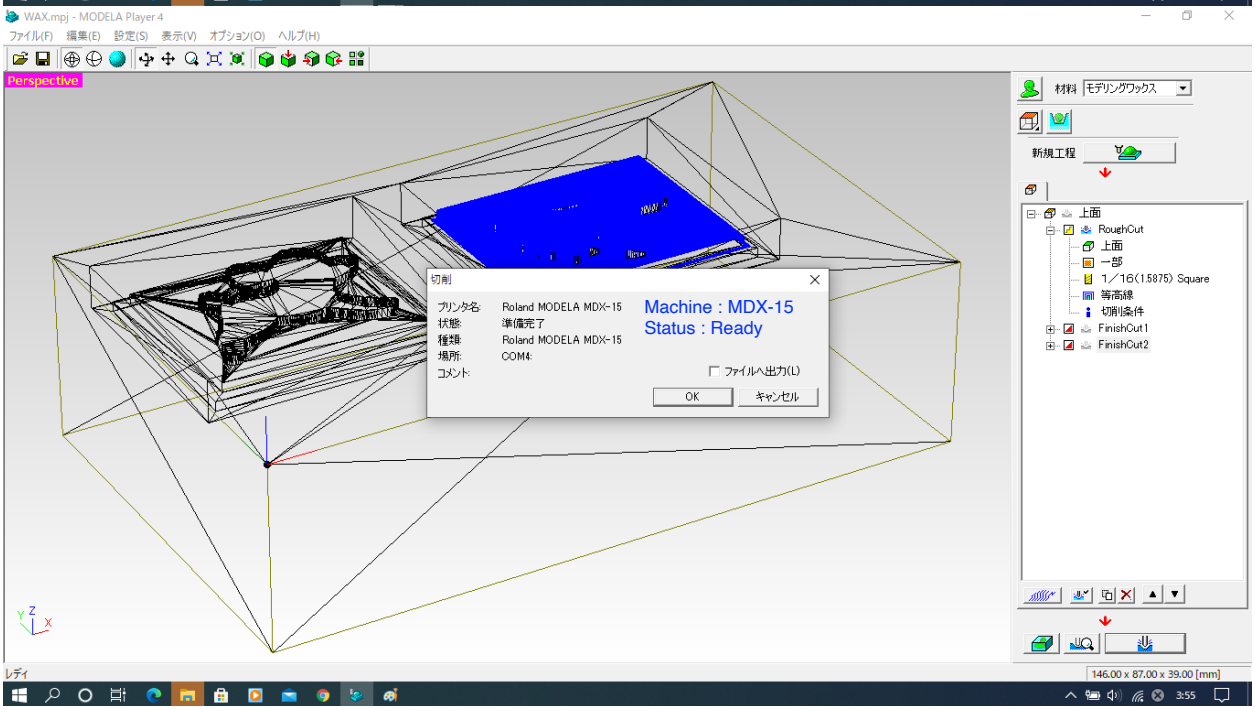

Pop up to confirm machine
Press OK

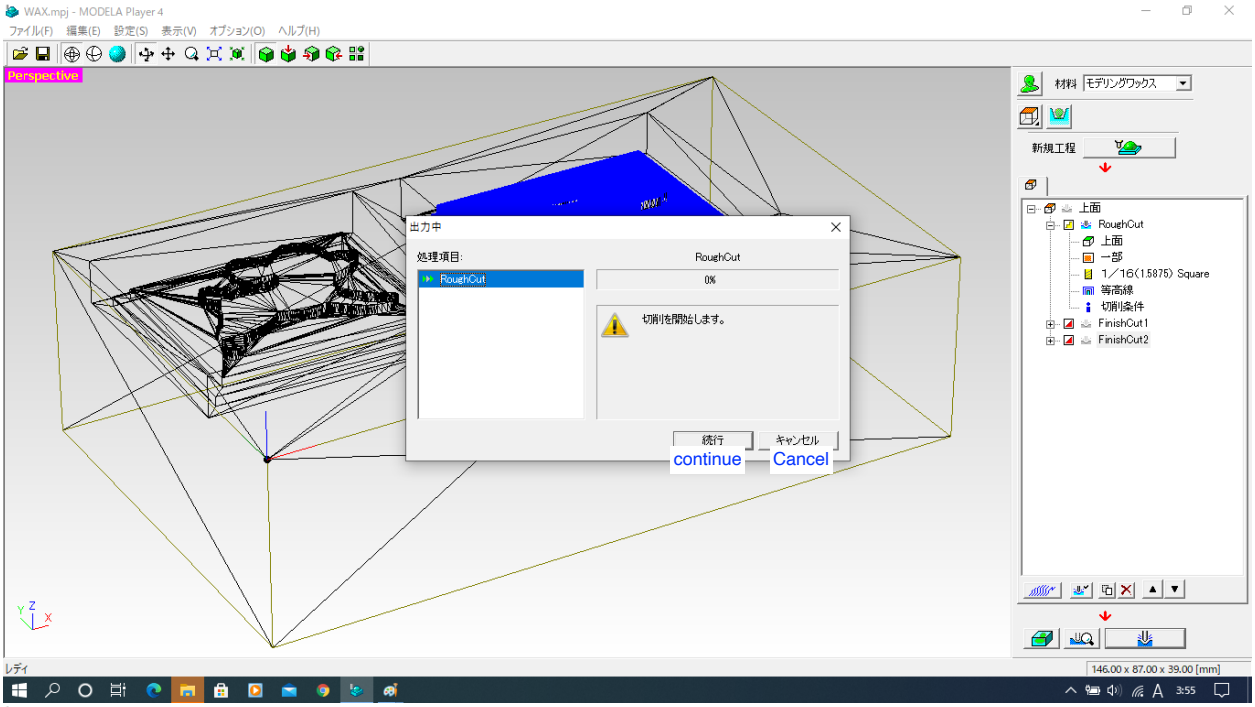

Pop up to confirm cutting start
Press Continue

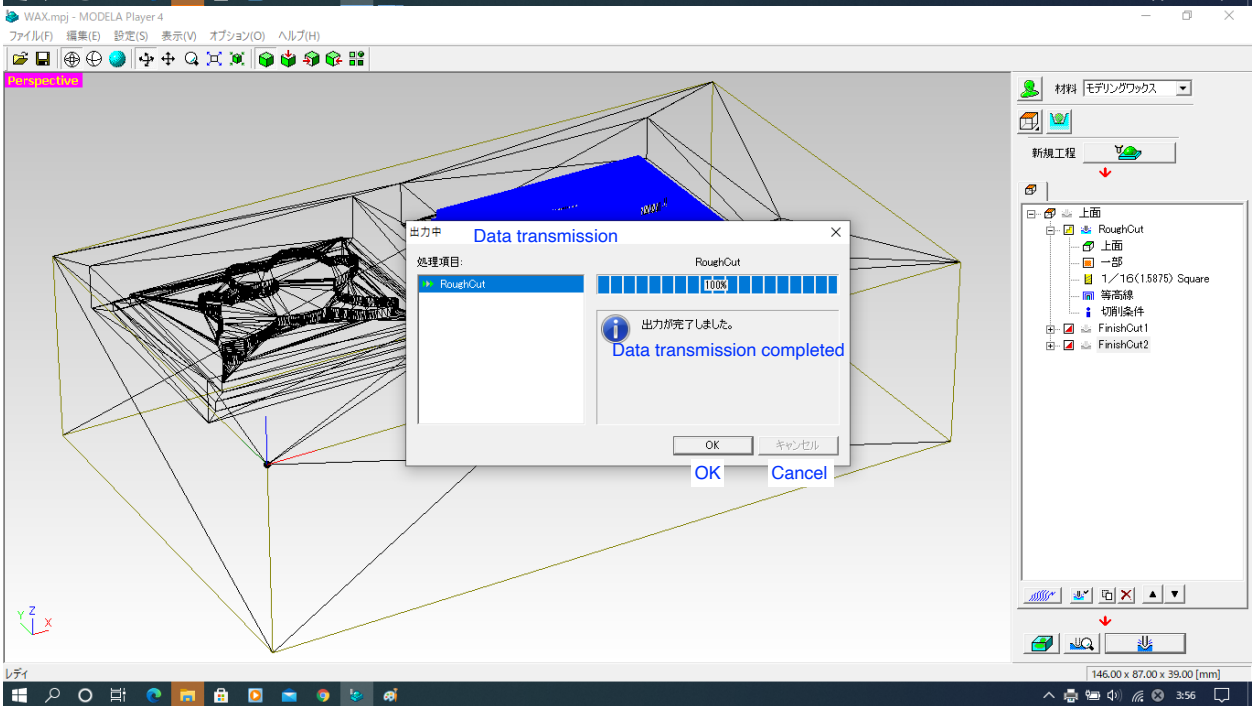

Pop up to tell data transmission completed
Then OK

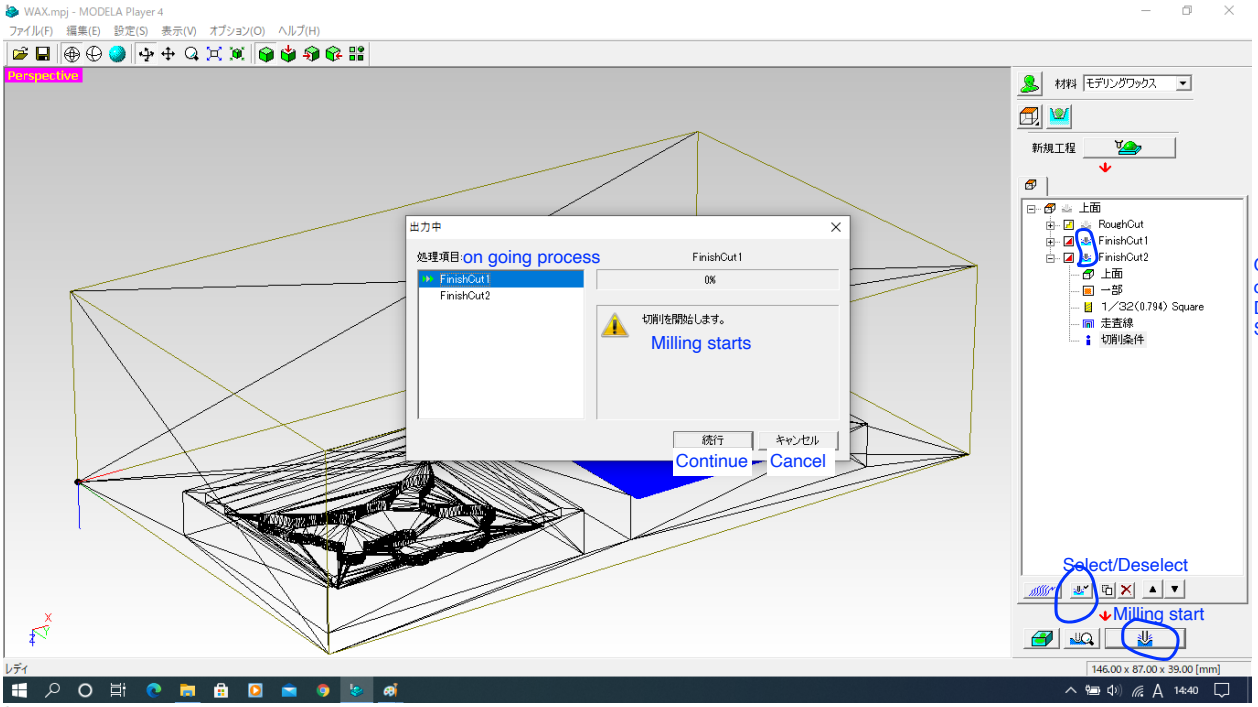

Once milling of RoughCut completed
Deselect RoughCut and
Select FinishCut1 and FinishCut2

Then press milling start.
Press Continue in on going process pop-up box.

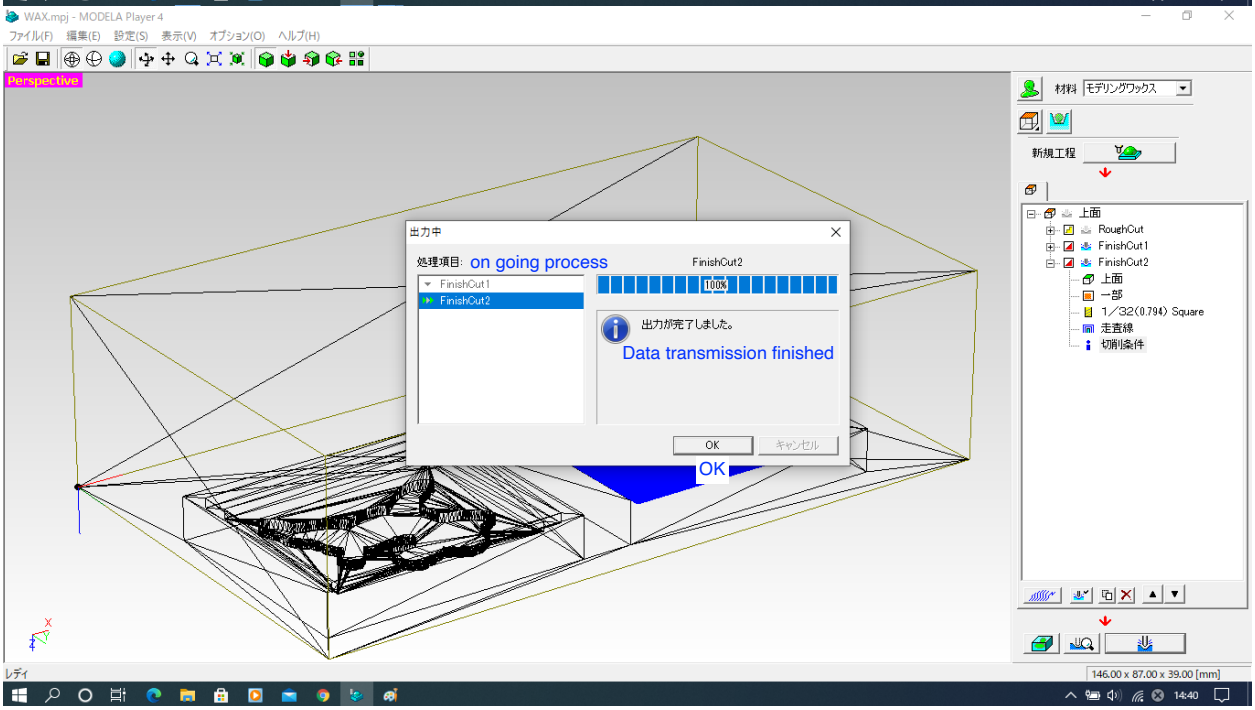

Data transmission finished,
Press OK.